MODULE – 3

Basic Structure of Computers, Instructions&Programs

Topics:

Functional Units
Basic Operational Concepts
Bus Structures
Performance –Processor Clock
Basic Performance Equation
Clock Rate
Performance Measurement.
Memory Location and Addresses
Memory Operations
Instructions and Instruction Sequencing
Addressing Modes

Introduction

- Computer Organization explains the function and design of the various units of digital computers that store and process information.
- It also deals with the input units of the computer which receive information from external sources and the output units which send computed results to external destinations.
- The input, storage, processing, and output operations are governed by a list of instructions that constitute a program.
- It deals about computer hardware and computer architecture.
- Computer hardware consists of electronic circuits, magnetic and optical storage devices, displays, electromechanical devices, and communication facilities.

Computer architecture encompasses the specification of an instruction set and the functional behavior of the hardware units that implement the instructions

Classes of Computers

- Desktop/laptop computers
  - General purpose, variety of software
  - Subject to cost/performance tradeoff
- Workstations
  - More computing power used in engg. applications, graphics etc.
- Enterprise System/ Mainframes
  - Used for business data processing
- Server computers (Low End Range)
  - Network based
  - High capacity, performance, reliability
  - Range from small servers to building sized
- Supercomputer (High End Range)
  - Large scale numerical calculation such as weather forecasting, aircraft design
- Embedded computers
  - Hidden as components of systems
  - Stringent power/performance/cost constraints

Functional Units

- A computer consists of five functionally independent main parts: input, memory, arithmetic and logic, output, and control units, as shown in Figure 1.1.

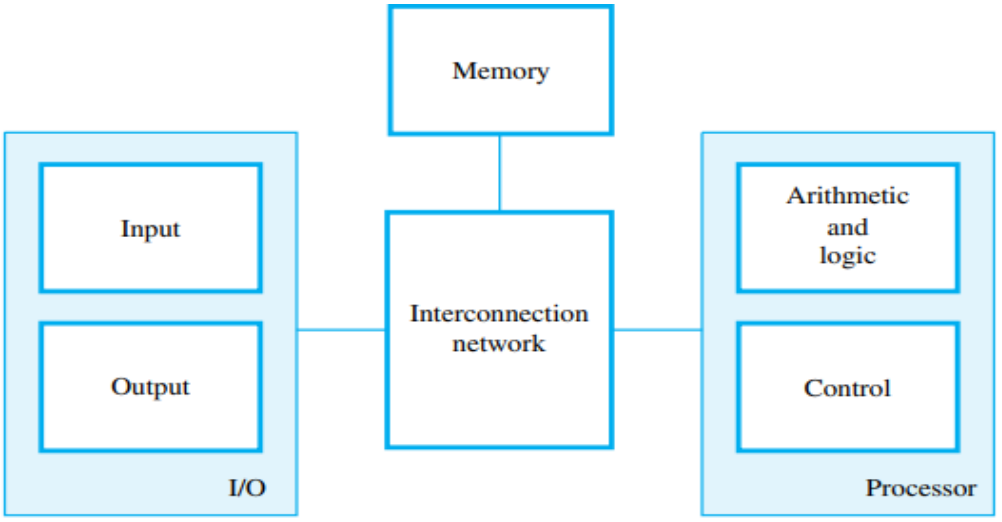

Figure 1.1 Basic functional units of a computer.

- The **input unit** accepts coded information from human operators using devices such as keyboards, or from other computers over digital communication lines.
- The information received is stored in the computer"s memory, either for later use or to be processed immediately by the **arithmetic and logic unit.**
- ***The processing steps are specified by a program that is also stored in the memory.***
- ***Finally, the results are sent back to the outside world through the*** *output unit***.**
- All of these actions are coordinated by the **control unit.**
- An **interconnection network** provides the means for the functional units to exchange information and coordinate their actions.

Input Units

- Computers accept coded information through input units.
- The most common input device is the keyboard.
- Whenever a key is pressed, the corresponding letter or digit is automatically translated into its corresponding binary code and transmitted to the processor.
- Many other kinds of input devices for human-computer interaction are available,including the touchpad, mouse, joystick, and trackball.
- These are often used as graphic input devices in conjunction with displays.

- Microphones can be used to capture audio input which is then sampled and converted into digital codes for storage and processing.
- Similarly, cameras can be used to capture video input.
- Digital communication facilities, such as the Internet, can also provide input to acomputer from other computers and database servers.

- The function of the memory unit is to **store programs and data.**
- There are two classes of storage, called **primary** and secondary.

Primary Memory :

- Primary memory, also called **main memory**, is a fast memory that operates at electronic speeds.
- Programs must be stored in this memory while they are being executed.
- The memory consists of a large number of semiconductor storage cells, each capable of storing one bit of information. These cells are rarely read or written individually.
- Instead, they are handled in groups of fixed size called **words.**
- The memory is organized so that one word can be stored or retrieved in one basic operation.
- The number of bits in each word is referred to as the word length of the computer, typically **16, 32, or 64 bits.**
  - To provide easy access to any word in the memory, a distinct address is associated with each word location.
  - Addresses are consecutive numbers, starting from 0, that identify successive locations.
  - A particular word is accessed by specifying its address and issuing a control command to the memory that starts the storage or retrieval process.
  - Instructions and data can be written into or read from the memory under the control of the processor.
  - It is essential to be able to access any word location in the memory as quickly as possible.
  - A memory in which any location can be accessed in a short and fixed amount of time after specifying its address is called a random-access memory (RAM). The time required to access one word is called the memory access time. This time is independent of the location of the word being accessed.
  - It typically ranges from a few nanoseconds (ns) to about 100 ns for current RAM units**.**

Cache Memory

- As an adjunct to the main memory, a smaller, faster RAM unit, called a **cache,** is used to hold sections of a program that are currently being executed, along with any associated data.
- The cache is tightly coupled with the processor and is usually contained on the same integrated-circuit chip.
- The purpose of the cache is to facilitate high instruction execution rates.
- At the start of program execution, the cache is empty.
- All program instructions and any required data are stored in the main memory.
- As execution proceeds, instructions are fetched into the processor chip, and a copy of each is placed in the cache.
- When the execution of an instruction requires data located in the main memory, thedata are fetched and copies are also placed in the **cache.**

Secondary Storage

- Primary memory is essential, it tends to be expensive and does not retain information when power is turned off.
- Thus additional, less expensive, permanent secondary storage is used when large amounts of data and many programs have to be stored, particularly for information that is accessed infrequently.
- Access times for secondary storage are longer than for primary memory.
- A wide selection of secondary storage devices is available, including magnetic disks, optical disks (DVD and CD), and flash memory devices.

Arithmetic and Logic Unit

- Most computer operations are executed in the **arithmetic and logic unit (ALU)** of the processor.
- Any arithmetic or logic operation, such as addition, subtraction, multiplication, division, or comparison of numbers, is initiated by bringing the required operandsinto the processor, where the operation is performed by the ALU.
- **For example,** if two numbers located in the memory are to be added, they are brought into the processor, and the addition is carried out by the ALU.
- The sum may then be stored in the memory or retained in the processor for immediate use.
- When operands are brought into the processor, they are stored in high-speed storage elements called **registers.**
- Each register can store one word of data.
- Access times to registers are even shorter than access times to the cache unit on the processor chip.

Output Unit

- The output unit is the counterpart of the input unit.
- Its function is to send processed results to the outside world.
- A familiar example of such a device is a **printer.**
- Most printers employ either photocopying techniques, as in laser printers, or ink jetstreams.
- Such printers may generate output at speeds of 20 or more pages per minute.
- However, printers are mechanical devices, and as such are quite slow compared tothe electronic speed of a processor.
- Some units, such as graphic displays, provide both an output function, showing text
- and graphics, and an input function, through touchscreen capability.

Control Unit

- The memory, arithmetic and logic, and I/O units store and process information and perform input and output operations.
- The operation of these units must be coordinated in some way.
- This is the responsibility of the **control unit.**
- The control unit is effectively the nerve center that sends control signals to other units and senses their states.
- I/O transfers, consisting of input and output operations, are controlled by program instructions that identify the devices involved and the information to be transferred.
- Control circuits are responsible for generating the timing signals that govern the transfers and determine when a given action is to take place.
- Data transfers between the processor and the memory are also managed by the control unit through timing signals.
- A large set of control lines (wires) carries the signals used for timing and synchronization of events in all units.

- The operation of a computer can be summarized as follows:
  - The computer accepts information in the form of programs and data through an input unit and stores it in the memory.
  - Information stored in the memory is fetched under program control into anarithmetic and logic unit, where it is processed
  - Processed information leaves the computer through an output unit
  - All activities in the computer are directed by the control unit

1. BASIC OPERATIONAL CONCEPTS:

The program to be executed is stored in memory. Instructions are accessed from memory to the processor one by one and executed.

STEPS FOR INSTRUCTION EXECUTION

Consider the following instruction

Ex: 1 Add LOCA, R_0

This instruction is in the form of the following instruction format

Opcode Source, Destination

Where Add is the *operation code*, LOCA is the Memory operand and R_0 is Register operand

This instruction adds the contents of memory location LOCA with the contents of Register R_0 and the result is stored in R_0 Register.

The symbolic representation of this instruction is

R_0 [LOCA] + [R_0]

The contents of memory location LOCA and Register R_0 before and after the execution of this instruction is as follows

Before instruction execution	After instruction execution
LOCA = 23H	**LOCA = 23H**
R_0 = 22H	**R_0 = 45H**

The steps for instruction execution are as follows

1. Fetch the instruction from memory into the IR (instruction register in CPU).
2. Decode the instruction 1111000000 10011010
3. Access the Memory Operand
4. Access the Register Operand
5. Perform the operation according to the Operation Code.
6. Store the result into the Destination Memory location or Destination Register.

Ex:2 Add R_1, R_2, R_3

This instruction is in the form of the following instruction format

Opcode, Source-1, Source-2, Destination

Where R1 is Source Operand-1, R2 is the Source Operand-2 and R3 is the Destination. This instruction adds the contents of Register R1 with the contents of R2 and the result is placed in R3 Register.

The symbolic representation of this instruction is

R3 ← [R1] + [R2]

The contents of Registers R1,R2,R3 before and after the execution of this instruction is as follows.

Before instruction execution	After instruction execution
R1 = 24H	**R1 = 24H**
R2 = 34H	**R2 = 34H**
R3 = 38H	**R3 = 58H**

The steps for instruction execution is as follows

1. Fetch the instruction from memory into the IR.
2. Decode the instruction
3. Access the First Register Operand R1
4. Access the Second Register Operand R2
5. Perform the operation according to the Operation Code.
6. Store the result into the Destination Register R3.

CONNECTION BETWEEN MEMORY AND PROCESSOR

The connection between Memory and Processor is as shown in the figure.
The Processor consists of different types of registers.

1. MAR (Memory Address Register)
2. MDR (Memory Data Register)
3. Control Unit
4. PC (Program Counter)
5. General Purpose Registers
6. IR (Instruction Register)
7. ALU (Arithmetic and Logic Unit)

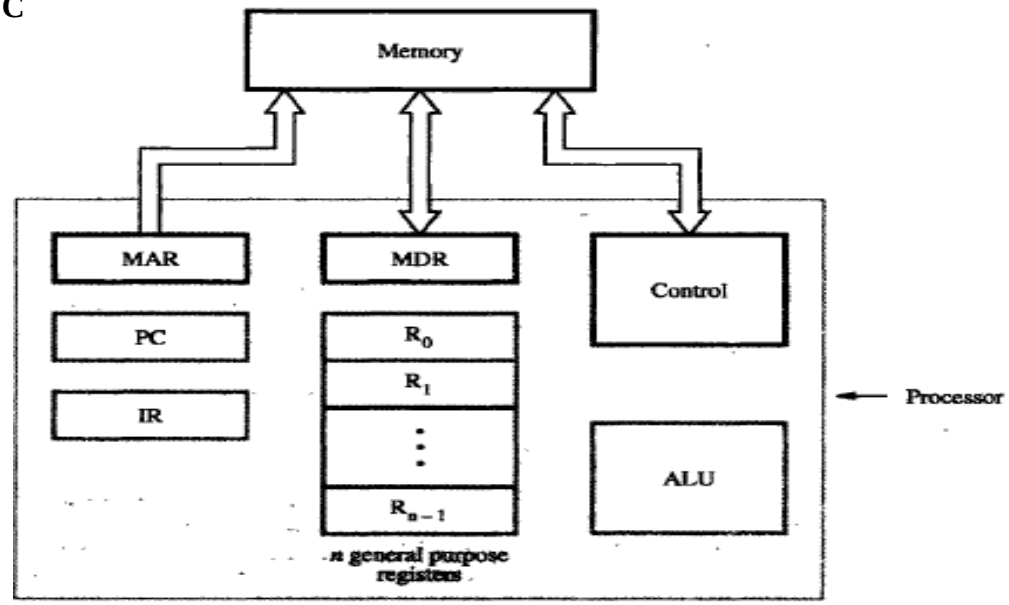

The functions of these registers are as follows

1. MAR

- It establishes communication between Memory and Processor
- It stores the address of the Memory Location as shown in the figure.

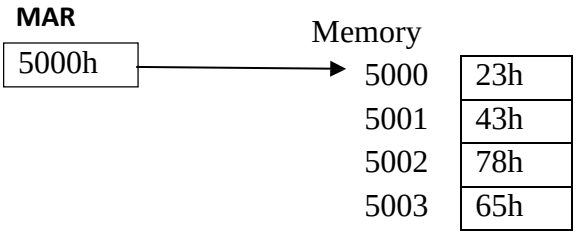

2. MDR

- It also establishes communication between Memory and the Processor.
- It stores the **contents** of the memory location (data or operand), written into or read from memory as shown in the figure.

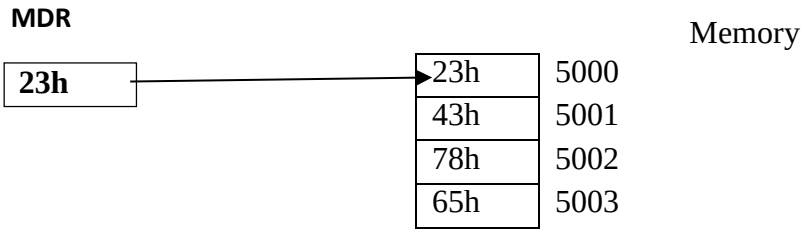

3. CONTROL UNIT

- It controls the data transfer operations between memory and the processor.
- It controls the data transfer operations between I/O and processor.
- It generates control signals for Memory and I/O devices.

4. PC (PROGRAM COUNTER)

- It is a special purpose register used to hold the address of the next instruction to be executed.
- The contents of PC are incremented by 1 or 2 or 4, during the execution of current instruction.
- The contents of PC are incremented by 1 for 8 bit CPU, 2 for 16 bit CPU and for 4 for 32 bit CPU.

4. GENERAL PURPOSE REGISTER / REGISTER ARRAY

The structure of register file is as shown in the figure

R_0
R_1
R_2
.
R_{n-1}

- It consists of set of registers.
- A register is defined as group of flip flops. Each flip flop is designed to store 1 bit of data.
- It is a storage element.
- It is used to store the data temporarily during the execution of the program(eg: result).
- It can be used as a pointer to Memory.
- The Register size depends on the processing speed of the CPU
- EX: Register size = 8 bits for 8 bit CPU

5. IR (INSTRUCTION REGISTER

It holds the instruction to be executed. It notifies the control unit, which generates timing signals that controls various operations in the execution of that instruction.

6. ALU (ARITHMETIC and LOGIC UNIT)

- It performs arithmetic and logical operations on given data.

Steps for reading the instruction.
PC contents are transferred to MAR and read signal is sent to memory by control unit.
The data from memory location is read and sent to MDR.
The content of MDR is moved to IR.

$$[PC] \rightarrow MAR \xrightarrow[\text{CU (read signal)}]{} Memory \rightarrow MDR \rightarrow IR$$

2. BUS STRUCTURE

Bus is defined as set of parallel wires used for data communication between different parts of computer. Each wire carries 1 bit of data. There are 3 types of buses, namely

1. Address bus
2. Data bus and
3. Control bus1.

1. Address bus :

- It is unidirectional.
- The processor (CPU) sends the address of an I/O device or Memory device by means of this bus.

2. Data bus

- It is a bidirectional bus.
- The CPU sends data from Memory to CPU and vice versa as well as from I/O to CPU and vice versa by means of this bus.

3. Control bus:

- This bus carries control signals for Memory and I/O devices. It generates control signals for Memory namely MEMRD and MEMWR and control signals for I/O devices namely IORD and IOWR.

The structure of single bus organization is as shown in the figure.

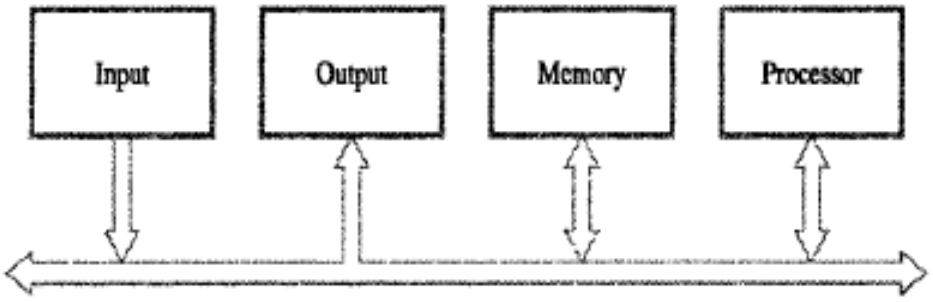

- The I/O devices, Memory and CPU are connected to this bus is as shown in the figure.
- It establishes communication between two devices, at a time.

Features of Single bus organization are

- Less Expensive
- Flexible to connect I/O devices.
- Poor performance due to single bus.

There is a variation in the devices connected to this bus in terms of speed of operation. Few devices like keyboard, are very slow. Devices like optical disk are faster. Memory and processor are faster, but all these devices uses the same bus. Hence to provide the synchronization between two devices, a buffer register is attached to each device. It holds the data temporarily during the data transfer between two devices.

3. *PERFORMANCE*

- The performance of a Computer System is based on hardware design of the processor and the instruction set of the processors.
- To obtain high performance of computer system it is necessary to reduce the execution time of the processor.
- Execution time: It is defined as total time required executing one complete program.
- The processing time of a program includes time taken to read inputs, display outputs, system services, execution time etc.
- The performance of the processor is inversely proportional to execution time of the processor.

More performance = Less Execution time.
Less Performance = More Execution time.

The Performance of the Computer System is based on the following factors

1. *Cache Memory*
2. *Processor clock*
3. *Basic Performance Equation*
4. *Instructions*
5. *Compiler*

***CACHE MEMORY*:** It is defined as a *fast access memory* located in between CPU and Memory. It is part of the processor as shown in the fig

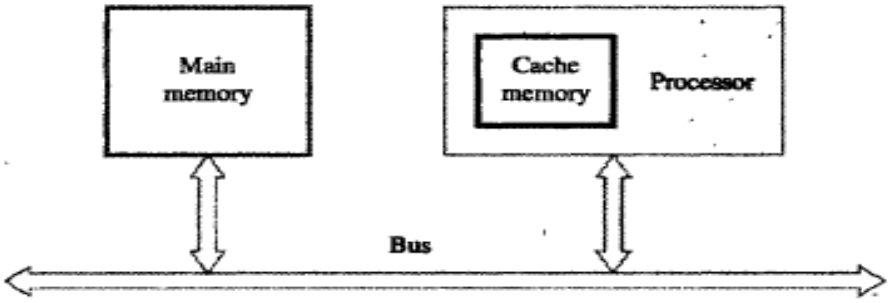

The processor needs more time to read the data and instructions from main memory because main memory is away from the processor as shown in the figure. Hence it slowdown the performance of the system.

The processor needs less time to read the data and instructions from Cache Memory because it is part of the processor. Hence it improves the performance of the system.

***PROCESSOR CLOCK*:** The processor circuits are controlled by timing signals called as Clock. It defines constant time intervals and are called as Clock Cycles. To execute one instruction there are 3 basic steps namely

1. Fetch

2. Decode
3. Execute.

The processor uses one clock cycle to perform one operation as shown in the figure

Clock Cycle →	T1	T2	T3
Instruction →	Fetch	Decode	Execute

The performance of the processor depends on the length of the clock cycle. To obtain high performance reduce the length of the clock cycle. Let „ P " be the number of clock cycles generated by the Processor and „ R „ be the Clock rate .

The Clock rate is inversely proportional to the number of clock cycles.

i.e R = 1/P.

Cycles/second is measured in Hertz (Hz). Eg: 500MHz, 1.25GHz.

Two ways to increase the clock rate –

- Improve the IC technology by making the logical circuit work faster, so that the time taken for the basic steps reduces.
- Reduce the clock period, P.

BASIC PERFORMANCE EQUATION

Let „T „be *total time* required to execute the program.

Let „N „be the *number of instructions* contained in the program.

Let „S „be the *average number of steps* required to one instruction.

Let „R" be number of clock cycles per second generated by the processor to execute one program.

Processor Execution Time is given by

T = N * S / R

This equation is called as Basic Performance Equation.

For the programmer the value of T is important. To obtain high performance it is necessary to reduce the values of N & S and increase the value of R

Performance of a computer can also be measured by using **benchmark** programs.

SPEC (System Performance Evaluation Corporation) is an non-profitable organization, that measures performance of computer using SPEC rating. The organization publishes the application programs and also time taken to execute these programs in standard systems.

$$SPEC = \frac{Running\ time\ of\ reference\ Computer}{Running\ time\ of\ computer\ under\ test}$$

DIFFERENCES MULTIPROCESSOR AND MULTICOMPUTER

MULTIPROCESSOR	MULTICOMPUTER
1. It is a process of interconnection of two or more processors by means of system bus.	It is a process of interconnection of two or more computers by means of system bus.
2. It uses common memory to hold the data and instructions.	It has its own memory to store data and instructions.
3. Complexity in hardware design.	Not much complexity in hardware design.
4. Difficult to program for multiprocessor system.	Easy to program for multiprocessor system

4. MEMORY LOCATIONS AND ADDRESSES

1. Memory is a storage device. It is used to store character operands, data operands and instructions.
2. It consists of number of semiconductor cells and each cell holds 1 bit of information. A group of 8 bits is called as byte and a group of 16 or 32 or 64 bits is called as word.

World length = 16 for 16 bit CPU and World length = 32 for 32 bit CPU. Word length is defined as number of bits in a word.

- Memory is organized in terms of bytes or words.
- The organization of memory for 32 bit processor is as shown in the fig.

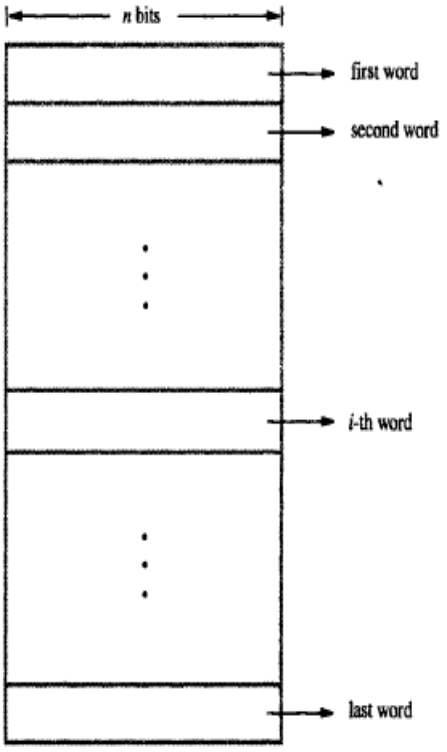

The contents of memory location can be accessed for read and write operation. The memory is accessed either by specifying address of the memory location or by name of the memory location.

- **Address space :** It is defined as number of bytes accessible to CPU and it depends on the number of address lines.

5. BYTE ADDRESSABILITY

Each byte of the memory are addressed, this addressing used in most computers are called byte addressability. Hence Byte Addressability is the process of assignment of address to successive bytes of the memory. The successive bytes have the addresses 1, 2, 3, 4……2^n-1. The memory is accessed in words.

In a 32 bit machine, each word is 32 bit and the successive addresses are 0,4,8,12,… and so on.

Address	32 – bit word			
0000	0th byte	1st byte	2nd byte	3rd byte
0004	4th byte	5th byte	6th byte	7th byte
0008	8th byte	9th byte	10th byte	11th byte
0012	12th byte	13th byte	14th byte	15th byte
…..	…..	…..	…..	…..
n-3	n-3th byte	n-2th byte	n-1th byte	n^{th} byte

BIG ENDIAN and LITTLE ENDIAN ASSIGNMENT

Two ways in which byte addresses can be assigned in a word.
Or
Two ways in which a word is stored in memory.

1. Big endian
2. Little endian

BIG ENDIAN ASSIGNMENT

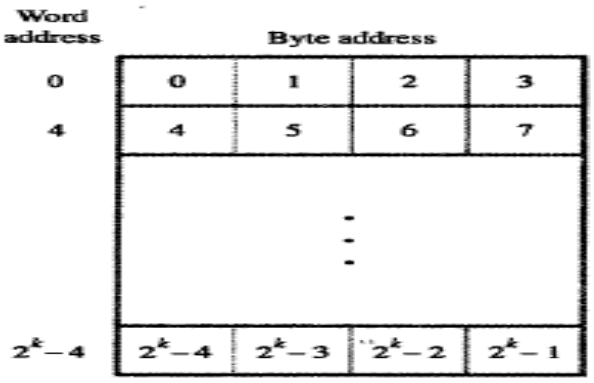

In this technique lower byte of data is assigned to higher address of the memory and higher byte of data is assigned to lower address of the memory.

The structure of memory to represent 32 bit number for big endian assignment is as shown in the above figure.

LITTLE ENDIAN ASSIGNMENT

In this technique lower byte of data is assigned to lower address of the memory and higher byte of data is assigned to higher address of the memory.

The structure of memory to represent 32 bit number for little endian assignment is as shown in the fig.

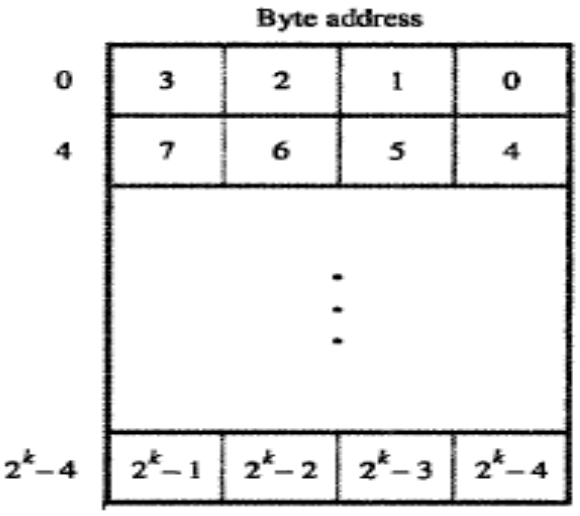

Eg – store a word "JOHNSENA" in memory starting from word 1000, using Big Endian and Little endian.

Bigendian -

1000	J 1000	O 1001	H 1002	N 1003
1004	S 1004	E 1005	N 1006	A 1007

Little endian -

1000	J 1003	O 1002	H 1001	N 1000
1004	S 1007	E 1006	N 1005	A 1004

WORD ALLIGNMENT

Word size → 16 bit
→ 32 bit
→ 64 bit

The structure of memory for 16 bit CPU, 32 bit CPU and 64 bit CPU are as shown in the figures 1,2 and 3 respectively

For 16 bit CPU

5000	34H
5002	65H
5004	86H
5006	93H
5008	45H

For 32 bit CPU

5000	34H
5004	65H
5008	86H
5012	93H
5016	45H

For 64 bit CPU

5000	34H
5008	65H
5016	86H
5024	93H
5032	45H

It is process of assignment of addresses of two successive words and this address is the number of bytes in the word is called as Word alignment.

ACCESSING CHARACTERS AND NUMBERS

The character occupies 1 byte of memory and hence byte address for memory.
The numbers occupies 2 bytes of memory and hence word address for numbers.

6. MEMORY OPERATION

Both program instructions and operands are in memory. To execute each instruction has to be read from memory and after execution the results must be written to memory. There are two types of memory operations namely 1. Memory read and 2. Memory write

Memory read operation [Load/ Read / Fetch]
Memory write operation [Store/ write]

1. MEMORY READ OPERATION:

- ✓ It is the process of transferring of 1 word of data from memory into Accumulator (GPR).
- ✓ It is also called as Memory fetch operation.
- ✓ The Memory read operation can be implemented by means of LOAD instruction.
- ✓ The LOAD instruction transfers 1 word of data (1 word = 32 bits) from Memory into the Accumulator as shown in the fig.

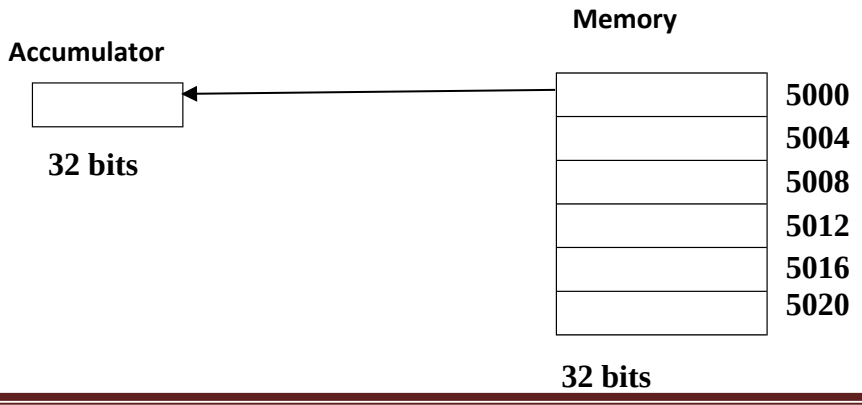

Steps for Memory Read Operation

(1) The processor loads MAR (Memory Address Register) with the address of the memory location.
(2) The Control unit of processor issues memory read control signal to enable the memory component for read operation.
(3) The processor reads the data from memory into the Accumulator by means of bi-directional data bus.

[MAR] → Memory → Accumulator

MEMORY WRITE OPERATION

- It is the process of transferring the 1 word of data from Accumulator into the Memory.
- The Memory write operation can be implemented by means of STORE instruction.
  The STORE instruction transfers 1 word of data from Accumulator into the Memory location as shown in the fig.

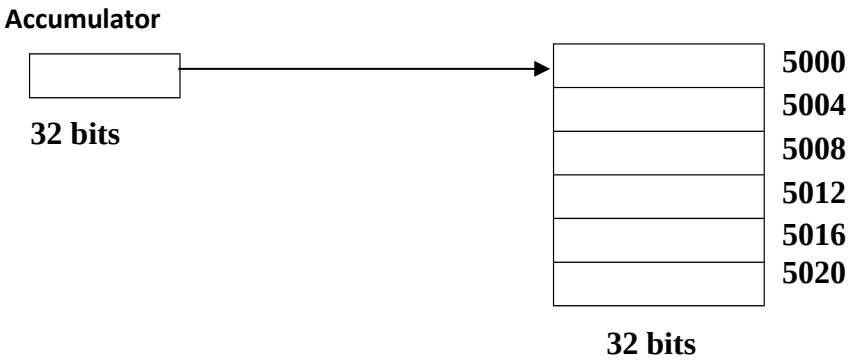

Steps for Memory Write Operation

- The processor loads MAR with the address of the Memory location.
- The Control Unit issues the Memory Write control signal.
- The processor transfers 1 word of data from the Accumulator into the Memory location by means of bi-directional data bus.

7. COMPUTER OPERATIONS (OR) INSTRUCTIONS AND INSTRUCTION EXECUTION

The Computer is designed to perform 4 types of operations, namely

- Data transfer operations
- ALU Operations
- Program sequencing and control.
- I/O Operations.

1. Data Transfer Operations

a) Data transfer between two registers.

Format: Opcode Source1 , Destination

The processor uses MOV instruction to perform data transfer operation between two registers The mathematical representation of this instruction is R1 → R2.

Ex : MOV R_1 , R_2 : R1 and R2 are the registers.

Where MOV is the operation code, R1 is the source operand and R2 is the destination operand. This instruction transfers the contents of R1 to R2.

EX: Before the execution of MOV R1,R2, the contents of R1 and R2 are as follows

R1 = 34h and R2 = 65h

After the execution of MOV R1, R2, the contents of R1 and R2 are as follows

R1 = 34H and R2 = 34H

b) Data transfer from memory to register

The processor uses **LOAD** instruction to perform data transfer operation from memory to register. The mathematical representation of this instruction is

[LOCA] → ACC. Where ACC is the Accumulator.

Format : opcode operand

Ex: LOAD LOCA

For this instruction Memory Location is the source and Accumulator is the destination.

c) Data transfer from Accumulator register to memory

The processor uses **STORE** instruction to perform data transfer operation from Accumulator register to memory location. The mathematical representation of this instruction is

[ACC] → LOCA. Where, ACC is the Accumulator.

Format: opcode operand

Ex: STORE LOCA

For this instruction accumulator is the source and memory location is the destination.

2. ALU Operations

The instructions are designed to perform arithmetic operations such as Addition, Subtraction, Multiplication and Division as well as logical operations such as AND, OR and NOT operations.

Ex1: ADD R_0, R_1

The mathematical representation of this instruction is as follows:

$R_1 \leftarrow [R_0] + [R_1]$; Adds the content of R_0 with the content of R_1 and result is placed in R_1.

Ex2: SUB R_0, R_1

The mathematical representation of this instruction is as follows:

$R_1 \leftarrow [R_0] - [R_1]$; Subtracts the content of R_0 from the content of R_1 and result is placed in R_1.

EX3: AND R_0, R_1 ; It Logically multiplies the content of R_0 with the content of R_1 and result is stored in R_1. (R_1= R_0 AND R1)

Ex4: NOT R_0 ; It performs the function of complementation.

3. I/O Operations: The instructions are designed to perform INPUT and OUTPUT operations. The processor uses MOV instruction to perform I/O operations.

The input Device consists of one temporary register called as DATAIN register and output register consists of one temporary register called as DATAOUT register.

a) Input Operation: It is a process of transferring one WORD of data from DATA IN register to processor register.

Ex: MOV DATAIN, R0

The mathematical representation of this instruction is as follows,

$R_0 \leftarrow$ [DATAIN]

b) Output Operation: It is a process of transferring one WORD of data from processor register to DATAOUT register.

Ex: MOV R_0, DATAOUT

The mathematical representation of this instruction is as follows,

$[R_0] \rightarrow$ DATAOUT

REGISTER TRANSFER NOTATION

- There are 3 locations to store the operands during the execution of the program namely 1. Register 2. Memory location 3. I/O Port. Location is the storage space used to store the data.
- The instructions are designed to transfer data from one location to another location.

Consider the first statement to transfer data from one location to another location

- " Transfer the contents of Memory location whose symbolic name is given by AMOUNT into processor register R_0."
- The mathematical representation of this statement is given by

$R_0 \leftarrow$ [AMOUNT]

Consider the second statement to add data between two registers

- "Add the contents of R_0 with the contents of R_1 and result is stored in R_2"
- The mathematical representation of this statement is given by

$R_2 \leftarrow [R_0] + [R_1]$.

Such a notation is called as "Register Transfer Notation".

It uses two symbols

1. A pair of square brackets [] to indicate the contents of Memory location and
2. $\leftarrow$ to indicate the data transfer operation.

ASSEMBLY LANGUAGE NOTATION

Consider the first statement to transfer data from one location to another location

- " Transfer the contents of Memory location whose symbolic name is given by AMOUNT into processor register R_0."
- The assembly language notation of this statement is given by

MOV AMOUNT, R_0

Opcode Source Destination

This instruction transfers 1 word of data from Memory location whose symbolic name is given by AMOUNT into the processor register R_0.

- The mathematical representation of this statement is given by

$R_0 \leftarrow$ [AMOUNT]

Consider the second statement to add data between two registers

- "Add the contents of R_0 with the contents of R_1 and result is stored in R_2"
- The assembly language notation of this statement is given by

ADD	R_0 ,	R_1,	R_2
Opcode	source1,	Source2,	Destination

This instruction adds the contents of R_0 with the contents of R_1 and result is stored in R_2.

- The mathematical representation of this statement is given by

  $R_2 \leftarrow [R_0] + [R_1]$.

Such a notations are called as "Assembly Language Notations"

BASIC INSTRUCTION TYPES

There are 3 types basic instructions namely

1. Three address instruction format
2. Two address instruction format
3. One address instruction format

Consider the arithmetic expression Z = A + B, Where A,B,Z are the Memory locations.

Steps for evaluation

1. Access the first memory operand whose symbolic name is given by A.
2. Access the second memory operand whose symbolic name is given by B.
3. Perform the addition operation between two memory operands.
4. Store the result into the 3rd memory location Z.
5. The mathematical representation is $Z \leftarrow [A] + [B]$.

a) Three address instruction format : Its format is as follows

opcode	Source-1	Source-2	destination

Destination ← [source-1] + [source-2]

Ex: ADD A, B, Z

Z ← [A] + [B]

a) Two address instruction format : Its format is as follows

opcode	Source	Source/destination

Destination ← [source] + [destination]

The sequence of two address m/c instructions to evaluate the arithmetic expression Z ← A + B are as follows

MOV A, R_0
MOV B, R_1
ADD R_0, R_1
MOV R_1, Z

b) One address instruction format : Its format is as follows

opcode	operand

Ex1: LOAD B

This instruction copies the contents of memory location whose symbolic name is given by „B‟ into the Accumulator as shown in the figure.

The mathematical representation of this instruction is as follows

ACC ← [B]

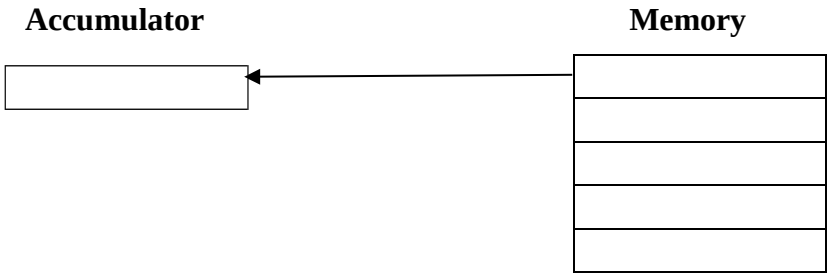

Ex2: STORE B

This instruction copies the contents of Accumulator into memory location whose symbolic name is given by „B‟ as shown in the figure. The mathematical representation is as follows

B ← [ACC].

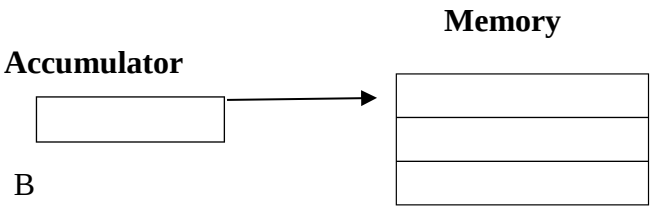

Ex3: ADD B

- This instruction adds the contents of Accumulator with the contents of Memory location „B‟ and result is stored in Accumulator.
- The mathematical representation of this instruction is as follows

ACC ←[ACC]+ [B]

STRIGHT LINE SEQUENCING AND INSTRUCTION EXECUTION

Consider the arithmetic expression

C = A+B , Where A,B,C are the memory operands.

The mathematical representation of this instruction is

C = [A] + [B].

The sequence of instructions using two address instruction format are as follows

MOV A, R_0
ADD B, R_0
MOV R_0, C

Such a program is called as 3 instruction program.

NOTE: The size of each instruction is 32 bits.

- The 3 instruction program is stored in the successive memory locations of the processor is as shown in the fig.

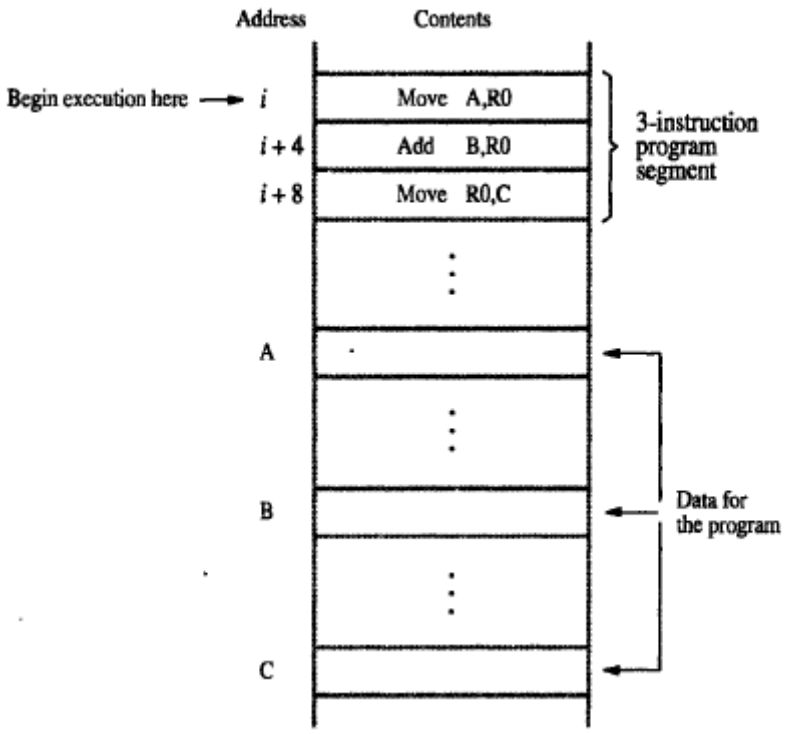

- The system bus consists of uni-directional address bus,bi-directional data bus and control bus

"It is the process of accessing the 1st instruction from memory whose address is stored in program counter into Instruction Register (IR) by means of bi-directional data bus and at the same time after instruction access the contents of PC are incremented by 4 in order to access the next instruction. Such a process is called as "Straight Line Sequencing".

INSTRUCTION EXECUTION

There are 4 steps for instruction execution

1 Fetch the instruction from memory into the Instruction Register (IR) whose address is stored in PC.

IR ← [[PC]]

2 Decode the instruction.

3 Perform the operation according to the opcode of an instruction

4 Load the result into the destination.

5 During this process, Increment the contents of PC to point to next instruction (In 32 bit machine increment by 4 address)

PC ← [PC] + 4.

6 The next instruction is fetched, from the address pointed by PC.

BRANCHING

Suppose a list of „N" numbers have to be added. Instead of adding one after the other, the add statement can be put in a loop. The loop is a straight-line of instructions executed as many times as needed.

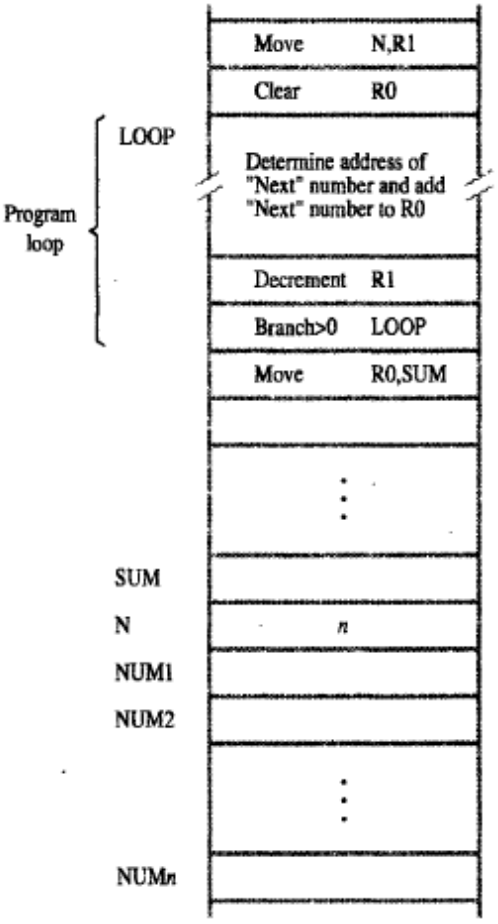

The „N" value is copied to R1 and R1 is decremented by 1 each time in loop. In the loop find the value of next elemet and add it with Ro.

In conditional branch instruction, the loop continues by coming out of sequence only if the condition is true. Here the PC value is set to „LLOP" if the condition is true.

Branch > 0 LOOP // if >0 go to LOOP

The PC value is set to LOOP, if the previous statement value is >0 ie. after decrementing R1 value is greater than 0.

If R1 value is not greater than 0, the PC value is incremented in a mormal sequential way and the next instruction is executed.

CONDITION CODE BITS

- The processor consists of series of flip-flops to store the status information after ALU operation.
- It keeps track of the results of various operations, for subsequent usage.
- The series of flip-flip-flops used to store the status and control information of the processor is called as "Condition Code Register". It defines 4 flags. The format of condition code register is as follows.

C	**V**	**Z**	**N**

1 N (NEGATIVE) Flag:
It is designed to differentiate between positive and negative result.
It is set 1 if the result is negative, and set to 0 if result is positive.

2 Z (ZERO) Flag:
It is set to 1 when the result of an ALU operation is found to zero, otherwise it is cleared.

3 V (OVER FLOW) Flag:
In case of 2^s Complement number system n-bit number is capable of representing a range of numbers and is given by -2^{n-1} to $+2^{n-1.}$. The Over-Flow flag is set to 1 if the result is found to be out of this range.

4 C (CARRY) Flag :
This flag is set to 1 if there is a carry from addition or borrow from subtraction, otherwise it is cleared.

8. Addressing Modes

The various formats of representing operand in an instruction or location of an operand is called as "Addressing Mode". The different types of Addressing Modes are

a) Register Addressing
b) Direct Addressing
c) Immediate Addressing
d) Indirect Addressing
e) Index Addressing
f) Relative Addressing
g) Auto Increment Addressing
h) Auto Decrement Addressing

a. REGISTER ADDRESSING:

In this mode operands are stored in the registers of CPU. The name of the register is directly specified in the instruction.

Ex: MOVE R_1,R_2 Where R1 and R2 are the Source and Destination registers respectively. This instruction transfers 32 bits of data from R1 register into R2 register. This instruction does not refer memory for operands. The operands are directly available in the registers.

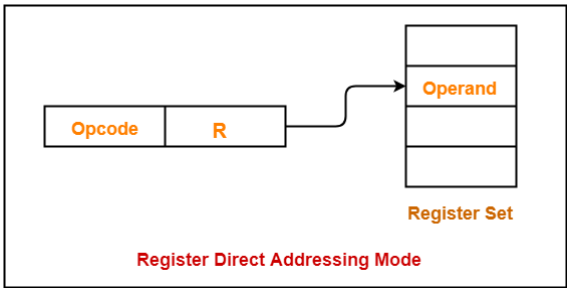

b. DIRECT ADDRESSING

It is also called as Absolute Addressing Mode. In this addressing mode operands are stored in the memory locations. The name of the memory location is directly specified in the instruction.

Ex: MOVE LOCA, R_1 : Where LOCA is the memory location and R1 is the Register.

This instruction transfers 32 bits of data from memory location X into the General Purpose Register R1.

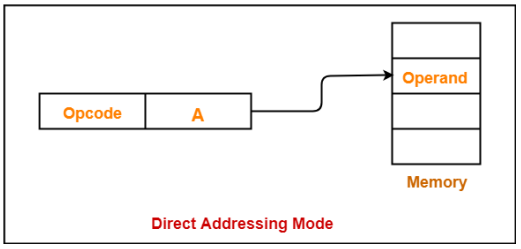

c. IMMEDIATE ADDRESSING

In this Addressing Mode operands are directly specified in the instruction. The source field is used to represent the operands. The operands are represented by # (hash) sign.

Ex: MOVE #23, R0

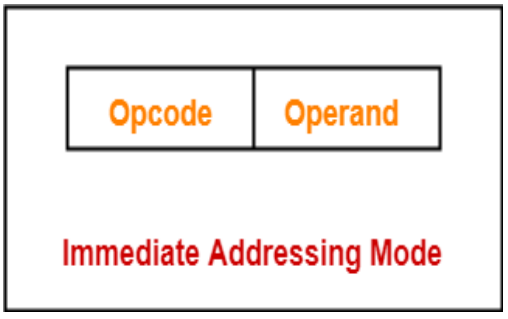

d. INDIRECT ADDRESSING

In this Addressing Mode effective address of an operand is stored in the memory location or General Purpose Register.

The memory locations or GPRs are used as the memory pointers.

Memory pointer: It stores the address of the memory location.

There are two types Indirect Addressing

i) Indirect through GPRs
ii) Indirect through memory location

i) Indirect Addressing Mode through GPRs

In this Addressing Mode the effective address of an operand is stored in the one of the General Purpose Register of the CPU.

Ex: ADD (R_1), R_0 ; Where R_1 and R_0 are GPRs

This instruction adds the data from the memory location whose address is stored in R_1 with the contents of R_0 Register and the result is stored in R_0 register as shown in the fig.

The diagrammatic representation of this addressing mode is as shown in the fig.

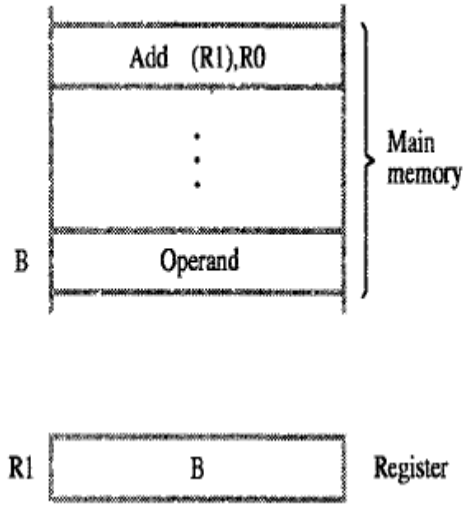

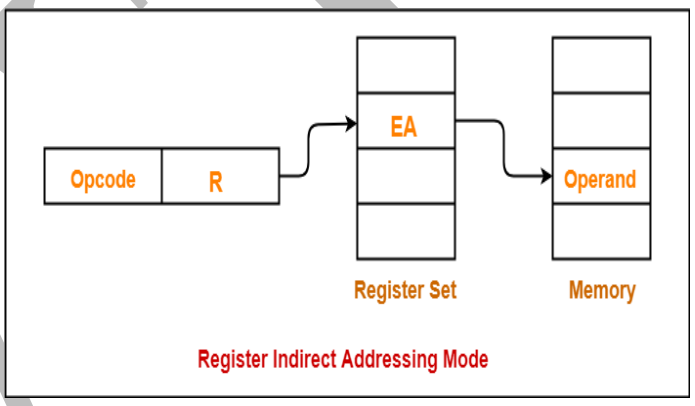

ii) Indirect Addressing Mode through Memory Location.

In this Addressing Mode, effective address of an operand is stored in the memory location.

Ex: ADD (X), R_0

This instruction adds the data from the memory location whose address is stored in „X" memory location with the contents of R_0 and result is stored in R_0 register.

The diagrammatic representation of this addressing mode is as shown in the fig.

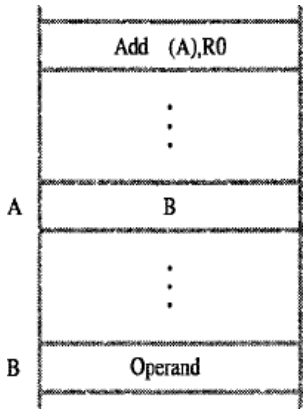

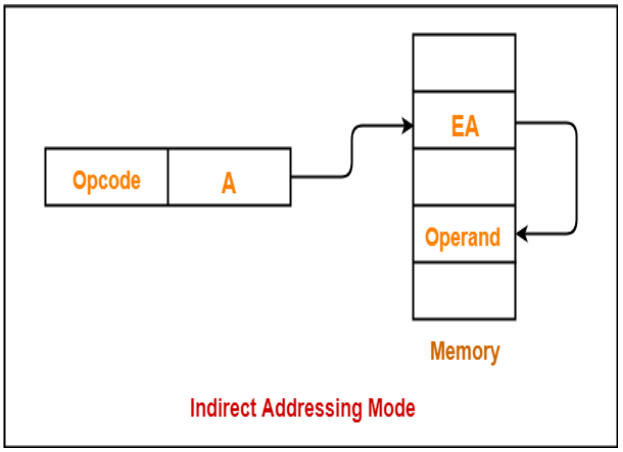

e. INDEX ADDRESSING MODE

In this addressing mode, the effective address of an operand is computed by adding constant value with the contents of Index Register and any one of the General Purpose Register namely R_0 to R_{n-1} can be used as the Index Register. The constant value is directly specified in the instruction.

The symbolic representations of this mode are as follows

1. X (R_i) where X is the Constant value and R_j is the GPR.

   It can be represented as

   EA of an operand = X + (R_i)

2. (R_i , R_J) Where R_i and R_j are the General Purpose Registers used to store addresses of an operand and constant value respectively. It can be represented as

   The EA of an operand is given by

   EA = (R_i) + (R_j)

3. X (R_i , R_j) Where X is the constant value and R_I and R_J are the General Purpose Registers used to store the addresses of the operands.It can be represented as

   The EA of an operand is given by

   EA = (R_i) + (R_j) + X

   There are two types of Index Addressing Modes

i) Offset is given as constant.

ii) Offset is in Index Register.

Note : Offset : It is the difference between the starting effective address of the memory location and the effective address of the operand fetched from memory.

i) Offset is given as constant

Ex: ADD $20(R_1)$, R_2

The EA of an operand is given by

$EA = 20 + [R_1]$

This instruction adds the contents of memory location whose EA is the sum of contents of R_1 with 20 and with the contents of R_2 and result is placed in R_2 register. The diagrammatic representation of this mode is as shown in the fig.

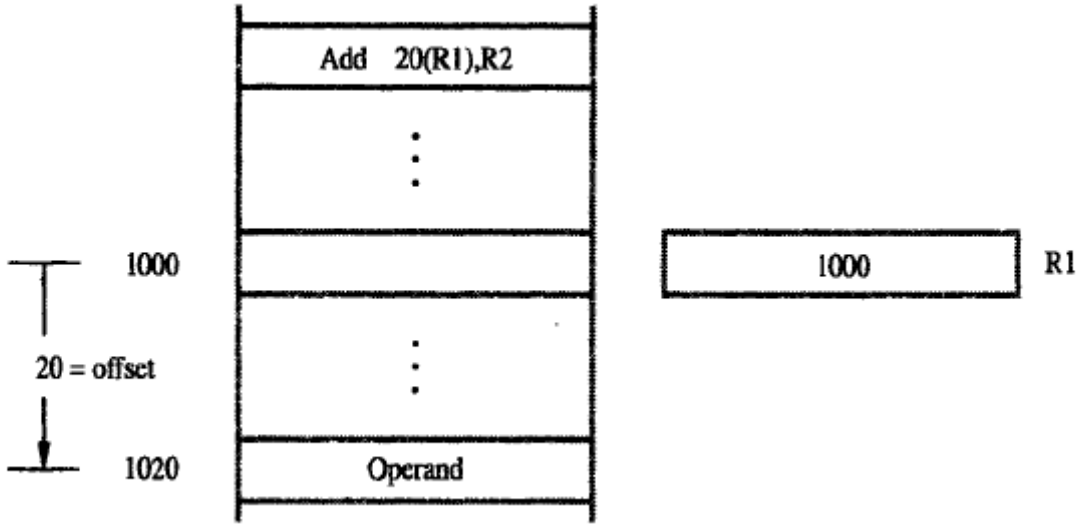

ii) Offset is in Index Register

Ex: ADD $1000(R_1)$, R_2 R_1 holds the offset address of an operand.

The EA of an operand is given by

$EA = 1000 + [R_1]$

This instruction adds the data from the memory location whose address is given by [1000 + [R1] with the contents of R_2 and result is placed in R_2 register.

The diagrammatic representation of this mode is as shown in the fig.

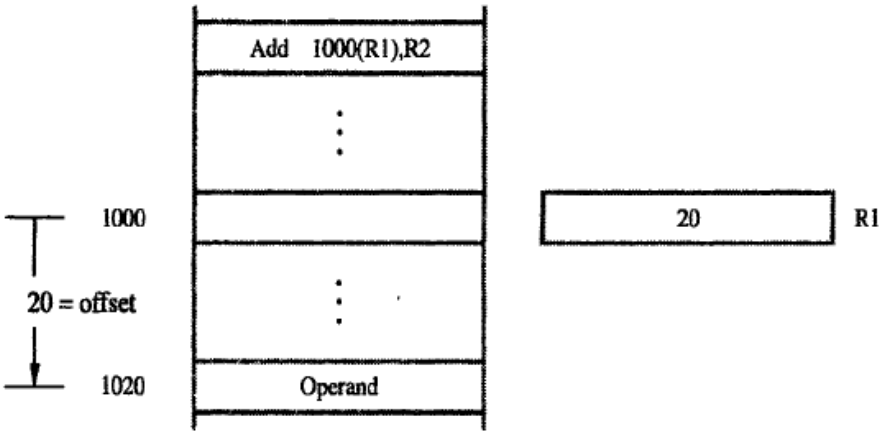

f. RELATIVE ADDRESSING MODE:

In this Addressing Mode EA of an operand is computed by the Index Addressing Mode. This Addressing Mode uses PC (Program Counter)to store the EA of the next instruction instead of GPR.

The symbolic representation of this mode is X (PC).Where X is the offset value and PC is the Program Counter to store the address of the next instruction to be executed.

It can be represented as

EA of an operand = X + (PC).

This Addressing Mode is useful to calculate the EA of the target memory location.

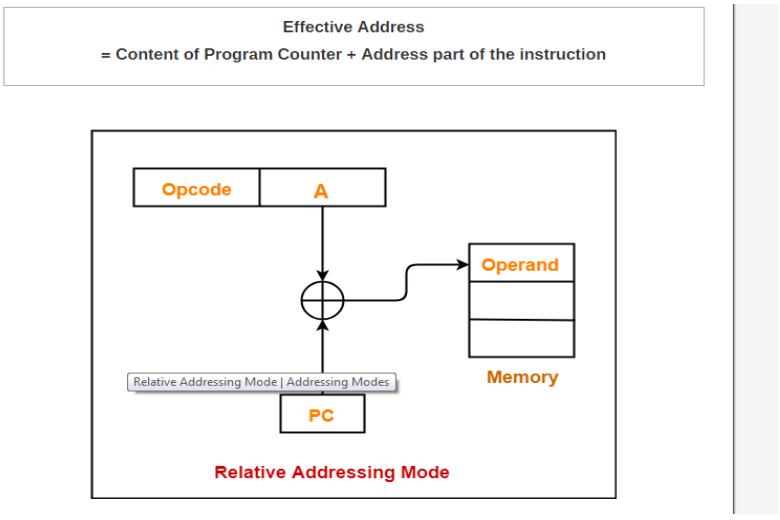

g. AUTO INCREMENT ADDRESSING MODE

In this Addressing Mode , EA of an operand is stored in the one of the GPR^s of the CPU. This Addressing Mode increment the contents of memory register by 4 memory locations after operand access.

The symbolic representation is

$(R_I)+$ Where R_i is the one of the GPR.

Ex: MOVE $(R_1)+$, R_2

This instruction transfer"s data from the memory location whose address is stored in R_1 into R_3 register and then it increments the contents of R_1 by 4 memory locations.

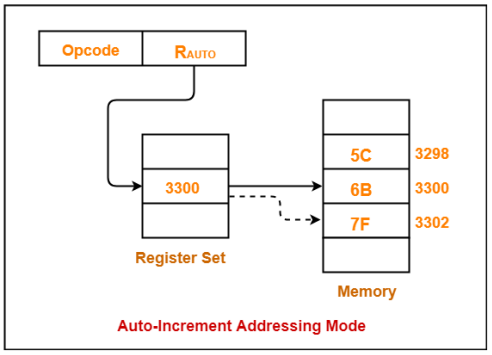

h. AUTO DECREMENT ADDRESSING MODE

In this Addressing Mode , EA of an operand is stored in the one of the GPR^s of the CPU. This Addressing Mode decrements the contents of memory register by 4 memory locations and then transfers the data to destination.

The symbolic representation is

$-(R_I)$ Where R_i is the one of the GPR.

Ex: MOVE $-(R_1)$, R_2
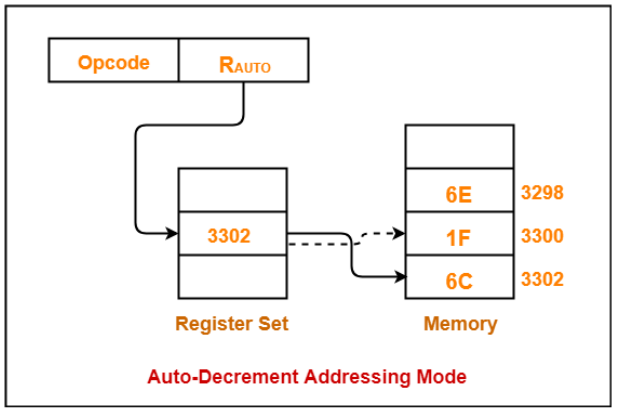
This instruction first decrements the contents of R_1 by 4 memory locations and then transfer"s data of that location to destination register.