Module 1

Single phase Transformer

Module-1

Single-phase Transformers: ***Necessity of transformer, the principle of operation, Types, and construction, EMF equation, equivalent circuit, Operation of the practical transformer under no-load and on-load with phasor diagrams. Losses and methods of reducing losses, efficiency, and condition for maximum efficiency. Polarity test, Sumpner's test.***

Open circuit and Short circuit tests, calculation of equivalent circuit parameters. Predetermination of efficiency, voltage regulation, and its significance. Numerical.

Introduction

The transformer is a device that transfers electrical energy from one electrical circuit to another electrical circuit. The two circuits may be operating at different voltage levels but always work at the same frequency. The transformer is an electromagnetic energy conversion device, that is commonly used in electrical power systems and distribution systems. It can change the magnitude of alternating voltage or current from one value to another. This useful property of transformer is mainly responsible for the widespread use of alternating currents rather than direct currents i.e., electric power is generated, transmitted, and distributed in the form of alternating current. Transformers have no moving parts, rugged and durable in construction, thus requiring very little attention. They also have a very high efficiency as high as 99%.

Necessity of transformers:

- For the power grid, transformers are essential for power transmission over long distances. Without them, our power grid simply would not be able to scale up to meet growing demand. This is because long lines enable power generation to be located at its energy or cooling source (a hydroelectric dam or nuclear facility, say). The generated power can then be efficiently sent to where it's needed (major population centers).
- Here's how it works. High-current low voltage AC power at the generator is stepped up with transformers into high voltage /low current - 220 kilovolts or more at 100A or so - then sent down the high-tension lines.
- The lower current is key: it allows practical wire sizes to be used in the overhead lines, and it reduces wire losses (sometimes called I2R or voltage drop loss) and allows more of the generated power to make it to the load and for lower cost.
- But 220kV voltage isn't practical to use in the home. So transformers are used to step the voltage back down to manageable levels. This is done in two stages:
- Receiving substations use transformers to step down the voltage to 13kV – 430 V or so for local distribution on utility poles or underground.
- Buildings take their feeds from still another set of transformers that take the utility voltage down to 430 to 220V. These transformers are the familiar canister-shaped devices mounted on the power poles.
- In electronics, small transformers perform a variety of duties: mixing, coupling. impedance matching, isolation, and power supply. These jobs aren't quite as dramatic as those done by the large power grid transformers but they're no less essential for dealing with AC in these systems.

Principle of operation:

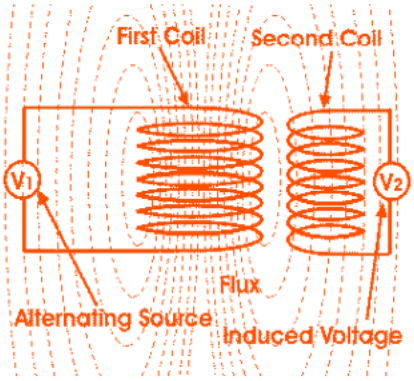

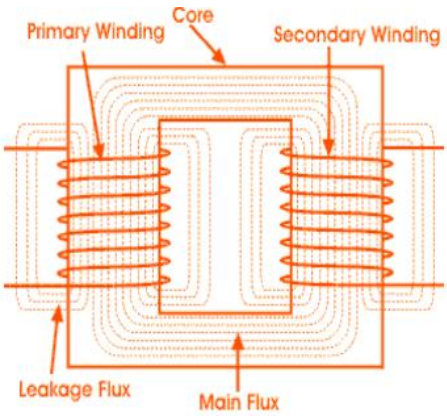

The working principle of the transformer is It depends upon Faraday's law of electromagnetic induction. Mutual induction between two or more winding is responsible for transformation action in an electrical transformer.

The basic concept of the transformer: Whenever we apply alternating current to an electric coil, there will be an alternating flux surrounding that coil. If we bring another coil near the first one, there will be an alternating flux linkage with that second coil. As the flux is alternating, there will be a rate of change in flux linkage with respect to time in the second coil. As per Faraday's law of electromagnetic induction an e.m.f will be induced in it.

The winding which takes electrical power from the source, is known as primary winding of transformer. The winding which the winding which gives the desired output voltage due to mutual induction in the transformer, is known as secondary winding of transformer.

In open air very tiny portion of the flux of the first winding will link with second coil. The current that flows through the closed circuit of second coil, will be so small in amount that it will be difficult to measure. The rate of change of flux linkage depends upon the amount of linked flux with the second winding. We desire almost all flux of primary winding to link with the secondary winding. This is effectively and efficiently done by placing one low reluctance path common to both winding. This low reluctance path is core of transformer, through which maximum number of fluxes produced by the primary is passed through and linked with the secondary winding.

Construction of single-phase Transformer:

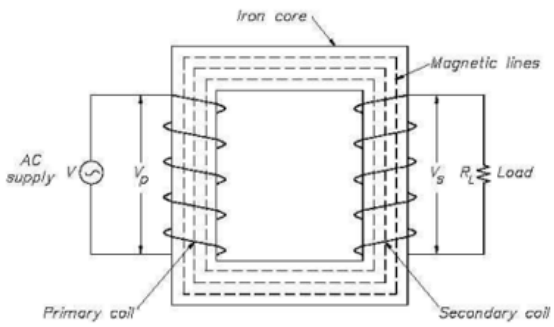

- There are two basic parts of a transformer:
  1) winding 2) Magnetic core
- The core of the transformer is either rectangular or square in size.
- The core is divided into i) Yoke ii) Limb
- Core is made up of silicon steel which has high permeability and low hysteresis co-efficient.
- The vertical portion on which the winding is wound is called Limb.

- The top and bottom horizontal portion is called Yoke.
- The core forms the magnetic circuit
- There are 2 windings i) Primary winding ii) Secondary winding which forms the Electric circuit. made up of conducting material like copper.
- The winding which is connected to the supply is called primary winding and having 'N1' number of turns
- The winding which is connected to a load is secondary winding and having 'N2' number of turns.
- Lamination of the core minimises eddy current loss.
- These laminations are insulated from each other by a thin coating of suitable varnish.
- The thickness of the lamination ranges from 0.35mm for a frequency of 25Hz to 0.5mm for a frequency of 50Hz.
- The lamination strips are assembled, where the joints are staggered to avoid narrow gaps all through the cross section of the core.

Types of transformers:

Transformers can be classified on different basis, like types of construction, types of cooling etc.

- Based on construction: 1. Core type transformer 2. Shell type transformer
- Based on their purpose 1. Step up transformer: 2. Step down transformer
- Based on type of supply 1. Single phase transformer 2. Three phase transformer
- Based on their use 1. Power transformer 2. Distribution transformer 3. Instrument transformer
- Based on cooling employed 1. Oil-filled self-cooled type 2. Oil-filled water-cooled type 3. Air blast type (air cooled)

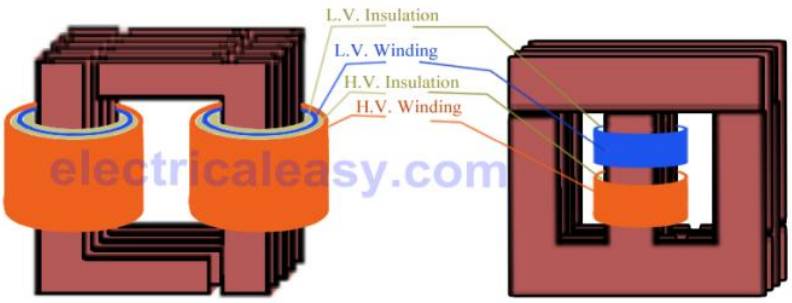

Core type Shell type

Core type transformer:

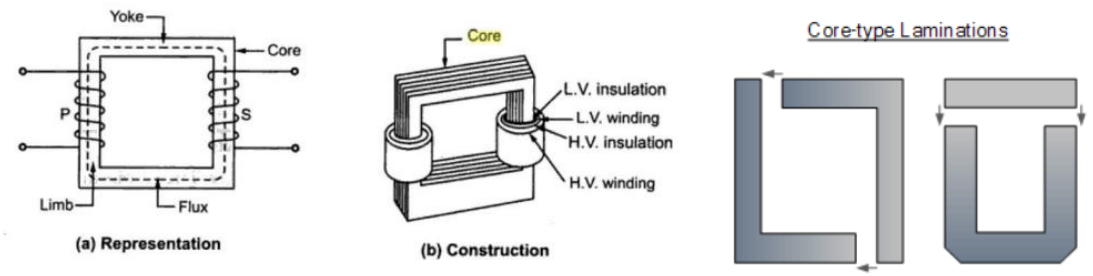

Fig Core Type of Transformer

- It has a single magnetic circuit.
- The core is rectangular having two limbs.
- The winding encircles the core.

- The coils used are of cylindrical type.
- The coils are wound in helical layer with different layers insulated from each other by paper or mica
- Both the coils are placed on both the limbs.
- The low voltage coil is placed inside, near the core while the high voltage coil surrounds the low voltage coil.
- Core is made up of large number of thin laminations.
- As the windings are uniformly distributed over the two limbs the natural cooling is more effective.
- The coils can be easily removed by removing the lamination of the top yoke , for maintenance.
- Fig (a) shows the schematic representation of the core type transformer while(b) shows the view of actual construction of the core type transformer.

Shell type transformer:

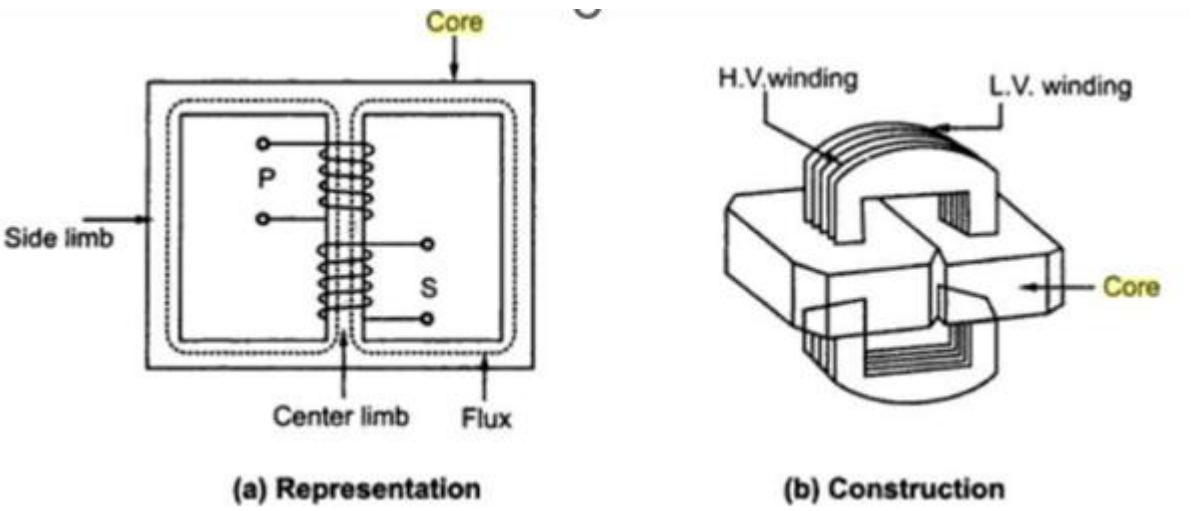

(a) Representation (b) Construction

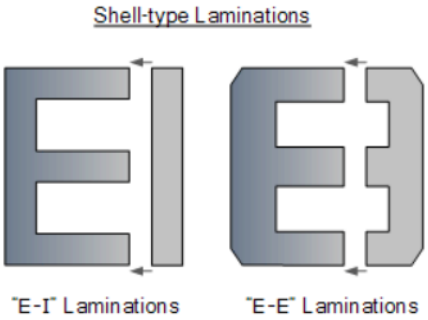

- It has a double magnetic circuit.
- The core has three limbs.
- Both the windings are placed on the central limb.
- The core encircles most part of the windings.
- The coils used a re generally multilayer disc type or sandwich coils.
- Each high voltage coil is in between low voltage coils and low voltage coils are nearest to top and bottom of the yokes.
- The core is laminated.
- While arranging the lamination of the core, the care is taken that all the joints at alternate layers are staggered.
- This is done to avoid narrow air gap at the joints, right through the cross section of the core. Such joints are called overlapped or imbricated joints.
- Generally, for very high voltage transformers, the shell type construction is preferred.
- As the winding is surrounded by the core, the natural cooling does not exist.

- Fig (a) shows the schematic representation of the shell type transformer while (b)shows the view of actual construction of the shell type transformer.

Comparison between Core and Shell type transformers:

Core Type Transformer	Shell Type Transformer
The core has only one magnetic circuit. The core cross section is uniform.	Two paths for the flux in the core. The cross section of the central leg will be twice the cross section of outer limbs.
Core has two limbs.	Core has three limbs.
Magnetic flux is uniform at all sections of the core.	Central limb carry double the flux compared to outer limbs.
Coils are placed on two limbs	Coils are placed on central limb.
The winding surrounds considerable part of core.	Core surrounds the winding.
Better cooling since more coil surface is exposed to atmosphere.	Cooling is less as less surface of the coil is exposed to atmosphere.
Natural cooling is provided.	Difficult to provide natural cooling.
Easy access to the winding makes maintenance easier	Less access to the winding makes maintenance difficult.
Mechanical protection to coil is less	Mechanical protection to coil is more

EMF equation of a Transformer:

Let us consider a transformer having:

N_1 = primary turns
N_2 = secondary turns
$Ø_m$= maximum value of the flux in the core linking both the windings
= B_mA
Where maximum flux density in the core (Wb/ m^2)
A = area of cross-section of the core (m^2)
f = frequency of AC input in hertz (Hz)
The induced emf in the primary winding of N_1 turns is

$$e_1 = -N_1 \frac{d\phi}{dt} \ldots\ldots(1)$$

As the primary applied voltage is sinusoidal in nature, the current it drives and the resulting flux produced are also sinusoidal. The equation for the flux is given by,

$$\boxed{\cos\theta = \sin\left(\frac{\pi}{2} - \theta\right)}$$

$$\phi = \phi_m \sin \omega t \ldots\ldots(2)$$

$$-\cos \omega t = \sin\left(\omega t - {}^{\pi}/_{2}\right)$$

Substituting this value of flux Ø in equation (1), we get

$$e_1 = -N_1 \frac{d(\phi_m \sin \omega t)}{dt}$$

$= -N_1 Ø_m\, \omega \cos \omega t$

$= \omega\, N_1 Ø_m\, [\sin(\omega t - {}^{\pi}/_{2})]$

$= 2\pi f\, N_1 Ø_m\, [\sin(\omega t - {}^{\pi}/_{2})] \ldots\ldots\ldots (3)$

From equation (2) & (3), we find that induced emf lags the flux by 90^0

The magnitude of the maximum value of the emf induced in the primary winding is given by,

$e_1 = 2\pi f\, N_1 Ø_m$

The rms value of the emf induced in the primary winding is given by,

$$E_1 = \frac{e_1}{\sqrt{2}} = \frac{2\pi f N_1 \phi_m}{\sqrt{2}}$$

$E_1 = 4.44 f\, N_1 Ø_m$

Similarly the rs value of the emf induced in the secondary winding is given by

$E_2 = 4.44 f\, N_2 Ø_m$

Transformation ratio

The ratio of secondary voltage to the primary voltage is called the transformation ratio or turns ratio, K.

The rms value of the induced e.m.f $E_1 = 4.44\, f\, T_1 \phi_m$

The rms value of this e.m.f is: $E_2 = 4.44\, f\, T_2 \phi_m$

Transformation ratio, $K = E_2/E_1 = T_2 / T_1$

• If transformation ratio, K > 1 the transformer is step up transformer.

• If transformation ratio, K < 1 the transformer is step up transformer.

Losses in Transformer: In transformer, 'loss' can be defined as the difference between input power and output power. An electrical transformer is an static device, hence mechanical losses (like windage or friction losses) are absent in it. The losses in a transformer are: iron losses and copper losses.

Iron loss or Core Loss (P_i): This is the power loss that occurs in the iron part. This loss is due to the alternating frequency of the emf. Iron loss in further classified into two other losses.

a) Eddy current loss b) Hysteresis loss

The Iron losses are called as the constant losses.
Eddy current loss and hysteresis loss depend upon the magnetic properties of the material used for the construction of core. These losses are known as **core losses or iron losses.**

a) Eddy current loss (We) :
This power loss is due to the alternating flux linking the core, which will induced an emf , due to which a current called the eddy current is being circulated in the core.
As there is some resistance in the core with this eddy current circulation converts into heat called the eddy current power loss.

$$\boxed{\text{Eddy current loss} = K_e B_m^2 f^2 t^2 \text{ watts/unit volume}}$$

where K_e = eddy current constant
t = thickness of the core

- Eddy current loss is proportional to the square of the supply frequency.
- Eddy current loss can be minimized by using the core made of thin sheets of silicon steel material, and each lamination is coated with varnish insulation to suppress the path of the eddy currents.

b) Hysteresis loss (W_h): This is the loss in the iron core, due to the magnetic reversal of the flux in the core, which results in the form of heat in the core. This loss is directly proportional to the supply frequency.

$$\boxed{\text{Hysteresis loss} = K_h B_m^{1.67} f v \text{ watts}}$$

K_h = hysteresis constant depends on material
B_m = maximum flux density
f = frequency.
v = volume of the core

Hysteresis loss can be minimized by using the core material having high permeability.

Total Iron loss Pi = We + Wh

The flux in the core is almost constant as supply voltage V_1 at rated frequency f is always constant. Hence the flux density B_m in the core and hence both hysteresis and eddy current losses are constants at all the loads. Hence the core or iron losses are also called constant losses. The iron losses are denoted as W_i.

2) Copper loss or I^2R losses (Pcu) :

The copper losses are due to the power wasted in the form of I^2R loss due to the resistances of the primary and secondary windings. The copper loss depends on the magnitude of the currents flowing through the windings.

$$\text{Total Cu loss} = I_1^2 R_1 + I_2^2 R_2$$
$$= I_1^2 (R_1 + R_2') = I_2^2 (R_2 + R_1')$$
$$= I_1^2 R_{1e} = I_2^2 R_{2e}$$

The copper losses are denoted by W_{cu}. If the current through the winding is full load current, we get copper losses at full load. If the load on the transformer is half then we get copper losses at half loads which are less than full load copper losses. Thus copper losses are called variable losses. For transformer VA rating is V_1I_1 or V_2I_2 . As V_1 is constant we can say that copper losses are proportional to the square of the KVA rating and square of the current.

So, $W_{cu} \alpha I^2 \alpha (KVA)^2$

Thus for a transformer

Total loss = iron losses + copper losses = $W_i + W_{cu}$

Thus if current is full load then copper losses are full load losses denoted by $W_{cu}(F.L)$.

If current is fraction of full load where n is the fraction then new copper losses are $n^2 W_{cu}(F.L)$.

Stray loss: The eddy currents, produced in the transformer by leakage flux, produce losses known as stray losses. You may be familiar with the hum or buzzing noise near your machines. It is due to the stray fields that cause the components of the tank to vibrate. This type of loss can be reduced by using thin sheets of insulated iron.

Dielectric loss: Dielectric loss can be observed in the insulating materials of the transformer. If the oil gets deteriorated or the solid insulation gets damaged it decreases the quality of the system. It also affects the overall efficiency of the transformer. An effective way to reduce dielectric loss is to test the oil regularly and also maintain the insulation quality.

Methods to reduces losses in the transformer:

Method to decrease Core losses:

- Eddy current losses within a transformer core can not be eliminated completely, but they can be greatly reduced and controlled by reducing the thickness of the steel core.
- Instead of having one big solid iron core as the magnetic core material of the transformer or coil, the magnetic path is split up into many thin pressed steel shapes called "laminations".
- The losses of energy, which appear as heat due both to hysteresis and to eddy currents in the magnetic path, is known commonly as "transformer core losses".

Method to decrease Copper losses:

- Transformers with high voltage and current ratings require conductors of large cross-sections to help minimize their copper losses.
- Increasing the rate of heat dissipation (better cooling) by forced air or oil, or by improving the transformers insulation so that it will withstand higher temperatures can also increase a transformers VA rating.

Efficiency of Transformer:

Due to the losses in a transformer, the output power of a transformer is less than the input power supplied

Therefore, Power output = Power input – total losses

Therefore, Power input = Power output + total losses

= Power output + Iron loss + Copper loss

= Power output + Wi + Wc

The efficiency of any device is defined as the ratio of power output to power input. So for a transformer the efficiency can be expressed as

$$\eta = \frac{\text{Power output}}{\text{Power input}}$$

$$\eta = \frac{\text{Power output}}{\text{Power output} + W_i + W_{cu}}$$

Now power output = $V_2 I_2 cos\emptyset$

Where $cos\varphi$ = load power factor

The transformer supplies full load of current I_2 and with terminal voltage V_2

W_{cu} = copper loss on full load = $I_2^2 R_{2e}$

Therefore, $\eta = \dfrac{V_2 I_2 \cos\varphi}{V_2 I_2 \cos\varphi + W_i + I_2^2 R_{2e}}$

but $V_2 I_2$ = VA rating of a transformer

Therefore $\eta = \dfrac{(\text{VA rating})\cos\varphi}{(\text{VA rating})\cos\varphi + W_i + I_2^2 R_{2e}}$

$$\eta = \frac{(\text{VA rating})\cos\varphi}{(\text{VA rating})\cos\varphi + W_i + I_2^2 R_{2e}} * 100 \text{.....Full load efficiency}$$

$$\eta = \frac{(\text{VA rating})\cos\varphi}{(\text{VA rating})\cos\varphi + W_i + W_{cu}(\text{F.L})} * 100 \text{..... full load efficiency}$$

But if the transformer is subjected to fractional load then using the appropriate values of the quantities, the efficiency can be obtained.

When load changes, the load current changes by same proportion

Therefore new $I_2 = n\, I_2\,(F.L)$

Similarly as copper losses are proportional to the square of the current then,

$$\text{New } (W_{cu}) = n^2 W_{cu}(F.L)$$

In general for fractional load the efficiency is given by

$$\eta = \frac{(\text{VA rating})\cos\varphi}{(\text{VA rating})\cos\varphi + W_i + n^2 W_{cu}(F.L)} * 100$$

Condition for Maximum Efficiency:

When a transformer works on a constant Input voltage and frequency then efficiency varies with the load. As load increases, the efficiency increases. At a certain load current, it achieves a maximum value. If the transformer is loaded further the efficiency starts decreasing.

Let us determine,

1. Condition for maximum efficiency
2. Load current at which η_{max} occurs.

The efficiency is functions of loads i.e. load current I_2 assuming cos φ_2 constant. The secondary terminal voltage V_2 is also assumed constant So for maximum efficiency,

$$\frac{d\eta}{dI_2} = 0$$

Now $$\eta = \frac{V_2 I_2 \cos\phi_2}{V_2 I_2 \cos\phi_2 + W_i + I_2^2 R_{2e}}$$

$$\therefore \quad \frac{d\eta}{dI_2} = \frac{d}{dI_2}\left[\frac{V_2 I_2 \cos\phi_2}{V_2 I_2 \cos\phi_2 + W_i + I_2^2 R_{2e}}\right] = 0$$

$$\therefore (V_2 I_2 \cos\phi_2 + W_i + I_2^2 R_{2e}) \frac{d}{dI_2}(V_2 I_2 \cos\phi_2)$$

$$- (V_2 I_2 \cos\phi_2) \cdot \frac{d}{dI_2}(V_2 I_2 \cos\phi_2 + W_i + I_2^2 R_{2e}) = 0$$

$$(V_2 I_2 \cos\varphi_2 + W_i + I_2^2 R_{2e})(V_2 \cos\varphi_2) - (V_2 I_2 \cos\varphi_2)(V_2 \cos\varphi_2 + 2 I_2 R_{2e}) = 0$$

Cancelling $V_2\cos\varphi_2$ from both the terms we get

$$V_2 I_2 \cos\varphi_2 + W_i + I_2^2 R_{2e} - V_2 I_2 \cos\varphi_2 - 2 I_2^2 R_{2e} = 0$$

$$W_i - I_2^2 R_{2e} = 0$$

$$\mathbf{W_i = I_2^2 R_{2e} = W_{cu}}$$

So condition to achieve maximum efficiency is that

Copper loss = Iron Loss i.e. $W_i = W_{cu}$

Load corresponding to maximum efficiency

If X is the load under maximum condition, W_i becomes cu loss for X kVA. We know that Cu loss is directly proportional to $(kVA)^2$, so

W_{cu} α (full load kVA)^2

Or W_i α $(X)^2$

Therefore , $$\left(\frac{X}{\text{full load kVA}}\right)^2 = \frac{W_i}{W_{cu}}$$

$$X = \text{Full load kVA} * \sqrt{\frac{W_i}{W_{cu}}}$$

$$\mathbf{X = Full\ load\ kVA} * \sqrt{\frac{\textit{Iron loss}}{\textit{full load copper loss}}}$$

Ideal Transformer

To understand the working of a transformer it is always instructive, to begin with the concept of an ideal transformer with the following properties.

1. Primary and secondary windings have no resistance.
2. All the flux produced by the primary links the secondary winding i.e., there is no leakage flux.
3. Permeability μ_r of the core is infinitely large. In other words, to establish flux in the core vanishingly small (or zero) current is required.
4. Core loss comprising of eddy current and hysteresis losses are neglected.

Practical transformer on no-load:

In a practical transformer, an iron core causes hysteresis and eddy current losses as it is subjected to alternating flux. While designing the transformer efforts are made to keep these losses minimum by,
1. Using high-grade material such as silicon steel to reduce hysteresis loss.
2. Manufacturing core in the form of laminations or stacks of thin laminations to reduce eddy current loss.
Apart from this, there are iron losses in the practical transformer. Practically primary winding has a certain resistance hence there are small primary copper loss present.
Thus the primary current under no load condition has to supply the iron loss, hysteresis loss, eddy current loss and a small amount of primary copper loss. This current is denoted as $\mathbf{I_0}$
Now the no load input current $\mathbf{I_0}$ has two components.
1. A purely reactive component Im called a magnetizing component of no load current required to produce the flux. is also called a **wattless component.**
2. An active component lc that supplies total losses under no load condition called a **power component** of no load current. This is also called the **wattful component** or core loss component of $\mathbf{I_0}$.
The total no-load current $\mathbf{I_0}$ is the vector addition of **Im** and **Ic**.

$$\bar{I}_0 = \bar{I}_m + \bar{I}_c$$

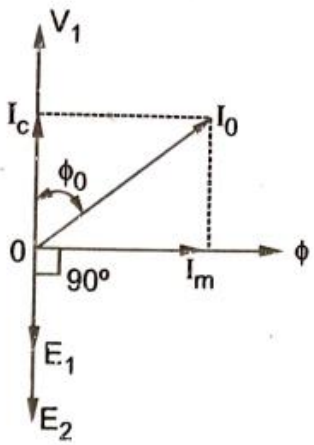

In practical transformer, due to winding resistance, no load current $\mathbf{I_0}$ is no longer at 90^0 with respect to V_1. But it lags V_1 by angle which is less than $Ø_0$. Thus cos 0 is called no load power factor of practical transformer.
From the phasor diagram is shown in the
It can be seen that the two components of $\mathbf{I_0}$ are,

$$I_m = I_0 \sin \phi_0$$

This is magnetising component lagging V_I exactly by 90^0.

$$I_c = I_0 \cos \phi_0$$

This is core loss component which is in phase with V_1. The magnitude of the no load current is given by

$$I_0 = \sqrt{I_m^2 + I_c^2}$$

while $Ø_0$ = no load primary power factor angle
The total power input on no load is denoted as Wo and is given by

$$W_0 = V_1 I_0 \cos \phi_0 = V_1 I_c$$

It may be noted that the current I_0 is very small, about 3 to 5 % of the full load rated current. Hence the primary copper loss is negligibly small hence I_c is called core loss or iron loss component. Hence power input Wo on no load always represents the iron losses, as copper loss is negligibly small. The iron losses are denoted as P_i and are constant for all load conditions.

$$W_0 = V_1 I_0 \cos \phi_0 = P_i = \text{Iron loss}$$

Practical Transformer on Load (MMF Balancing on Load):

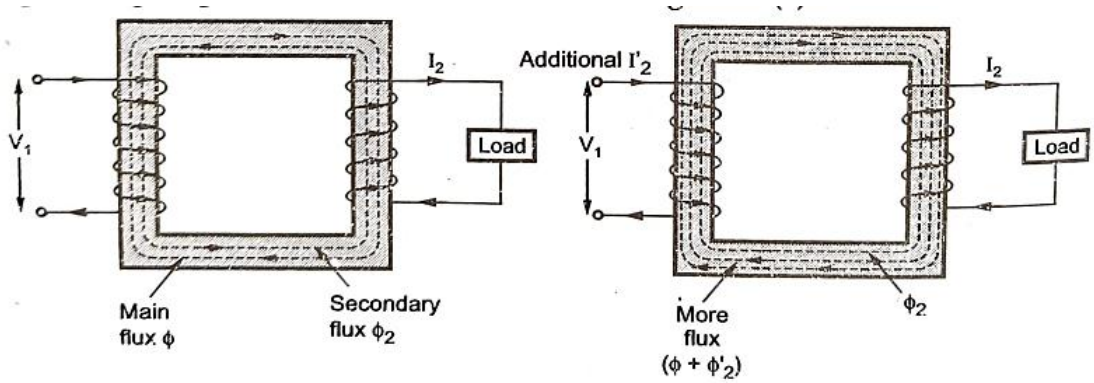

$Ø_2$ opposes Ø Primary draws more current

When the transformer is loaded, the current I_2 flows through the secondary winding. The magnitude and phase of I_2 is determined by the load. If load is inductive, I_2 lags V_2 If load is capacitive, I_2 leads V_2 while for resistive load, I_2 is in phase with V_2.

There exists a secondary m.m.f. $N_2 I_2$ due to which secondary current sets up its own flux $Ø_2$. This flux opposes the main flux Ø which is produced in the core due to magnetising component of no-load current. Hence the m.m.f. $N_2 I_2$ is called demagnetising ampere-turns.

The flux $Ø_2$ momentarily reduces the main flux Ø, due to which the primary induced emf E_1 also reduces. Hence the vector difference $\overline{V_1} - \overline{E_1}$ increases due to which primary draws more current from the supply. This additional current drawn by primary is due to the load hence called load component of primary current denoted as I_2'

This current I_2' is in antiphase with I_2. The current I_2' sets up its own flux $Ø_2$' which opposes the flux $Ø_2$, and helps the main flux Ø. This fiux $Ø_2$' neutralises the flux $Ø_2$ produced by I_2. The m.m.f. ie. ampere turns $N_1 I_2$' balances the ampere turns $N_2 I_2$. Hence the net flux in the core is again maintained at constant level.

The load component current I_2' always neutralises the changes in the load. As practically flux in core is constant, the core loss is also constant for all the loads. Hence the transformer is called constant flux machine.As the ampere turns are balanced we can write,

$N_2 I_2 = N_1 I_2$'

$$I_2^1 = \frac{N_2}{n'} I_2 = KI_2$$

Thus when transformer is loaded, the primary current I_1 has two components:

1. The no load current I_0 which lags V_1 by angle $Ø_0$. It has two components Im and Ic
2. The load component I_2' which is in antiphase with I_2. And phase of I_2 is decided by the load. Hence primary current is vector sum of I_0 and I_2'.

$$\overline{I_1} = \overline{I_0} + \overline{I'_2}$$

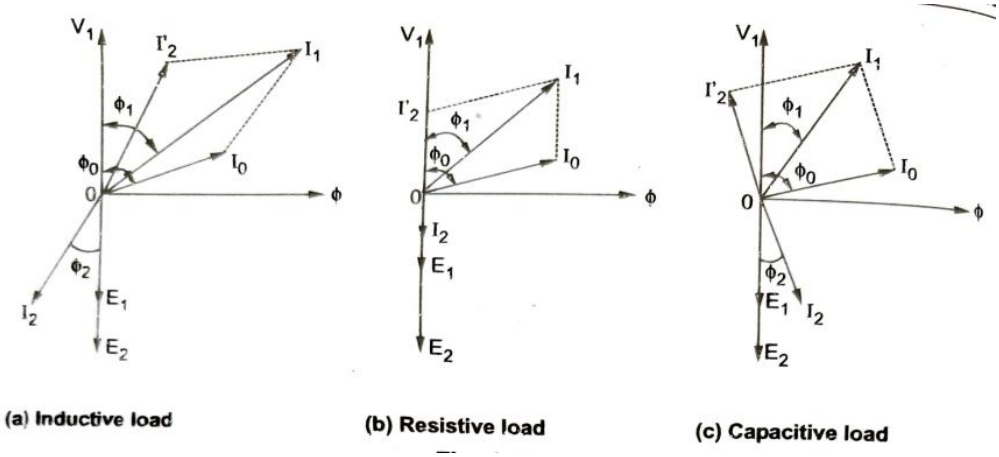

Equivalent Circuit of Transformer:

For a transformer, no load primary current $\mathbf{I_0}$ has two components,

$I_m = I_0 \sin Ø_0$ = Magnetising component

$I_c = I_0 \cos Ø_0$ = Active component

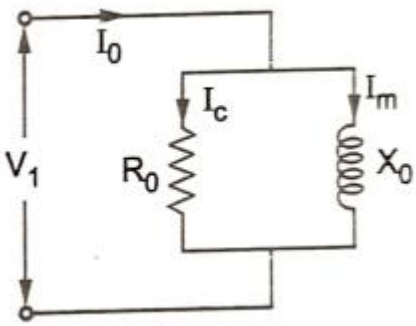

Im produces the flux and is assumed to flow through reactance X0 called no load reactance while Ic is active component representing core losses hence is assumed to flow through the resistance R0. Hence equivalent circuit on no load can be shown as in the Fig. This circuit consisting of R0 and X0 in parallel is called exciting circuit.

$R_0 = \frac{V_1}{I_c} \quad X_0 = \frac{V_1}{I_m}$

When the load is connected to the transformer then secondary current I_2 flows. This causes voltage drop across R_2 and X_2. Due to I_2, primary draws an additional current $I_2' = I_2 / K$. Now I_1 is the phasor addition of Io and I_2'. This I_1 causes the voltage drop across primary resistance R_1 and reactance X_1.

But in the equivalent circuit, windings are not shown and it is further simplified by transferring all the values to the primary or secondary.

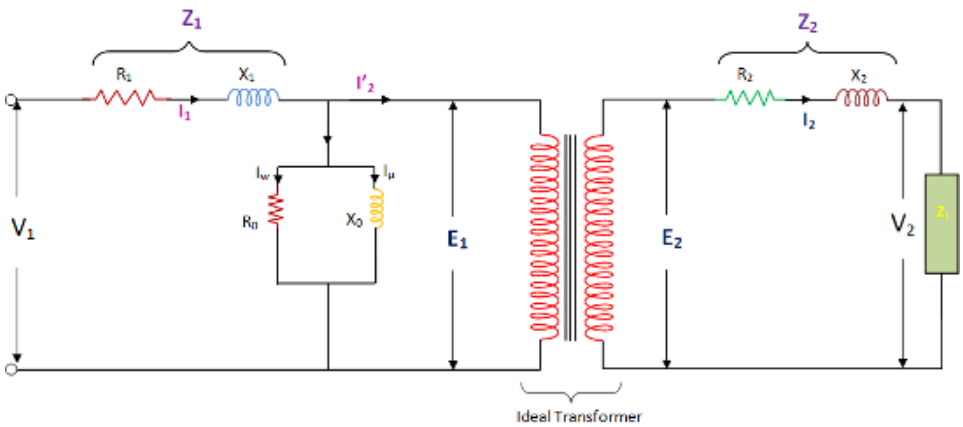

Equivalent Circuit diagram of Transformer

R1 = Primary Winding Resistance.

R_2= Secondary winding Resistance.

I_0= No-load current.

I_μ = Magnetizing Component,

I_W = Working Component

This I_μ & I_W are connected in parallel across the primary circuit. The value of E_1 (Primary e.m.f) is obtained by subtracting vectorially I_1 Z_1 from V_1 . The value of $X_0 = E_1 / I_0$ and $R_0 = E_1 / I_W$. We know that the relationof E_1 and E_2 is $E_2 / E_1 = N_2 / N_1 = K$, (transformation Ratio)

So transferring secondary parameters to primary we get,

$$R_2' = \frac{R_2}{K^2} \quad X_2' = \frac{X_2}{K^2} \quad Z_2' = \frac{Z_2}{K^2}$$

$$\text{While } E_2' = \frac{E_2}{K^2} \quad I_2' = KI_2 \quad \text{where } K = \frac{N_2}{N_1}$$

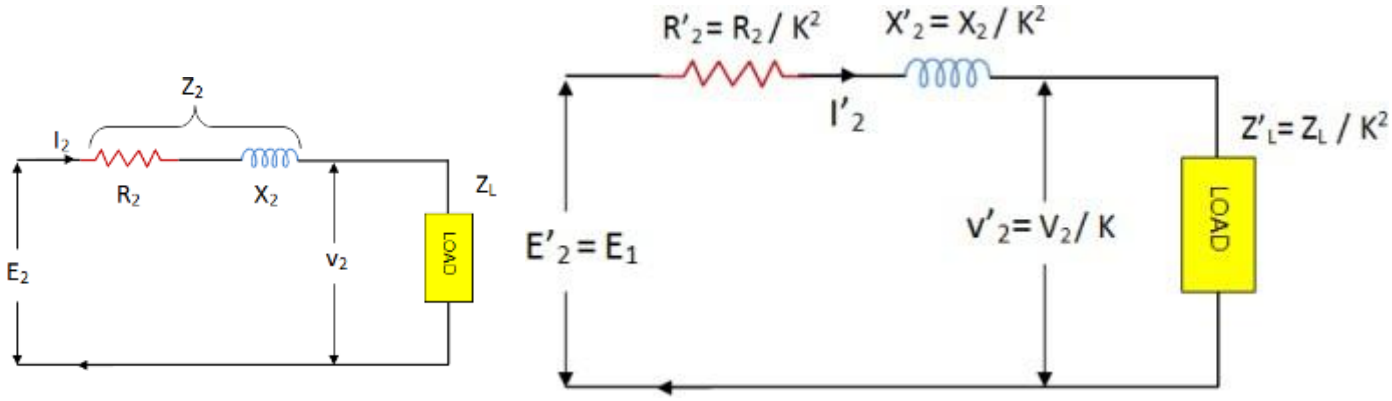

The total equivalent circuit of the transformer is obtained by adding in the primary impedance as shown in –Fig.

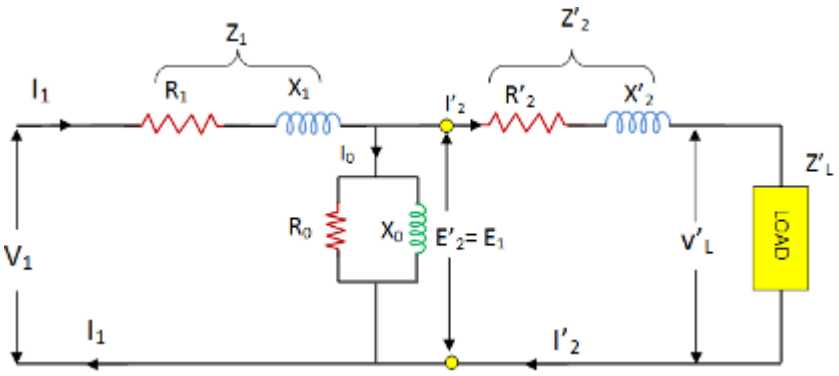

And It can be simplified the terminals shown in above fig & further simplify the equivalent circuit is shown infig.

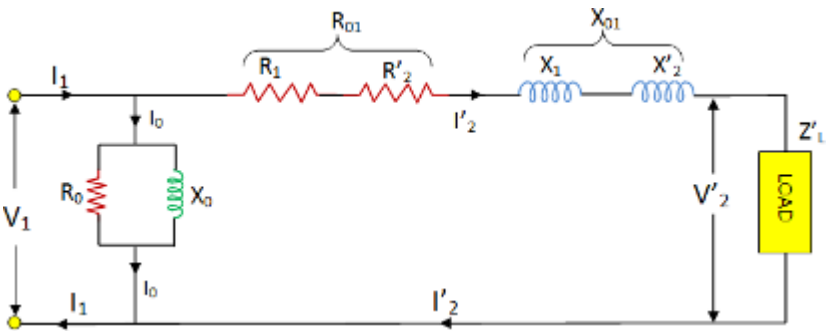

At last, the circuit is simplified by omitting I0 altogether as shown in fig-

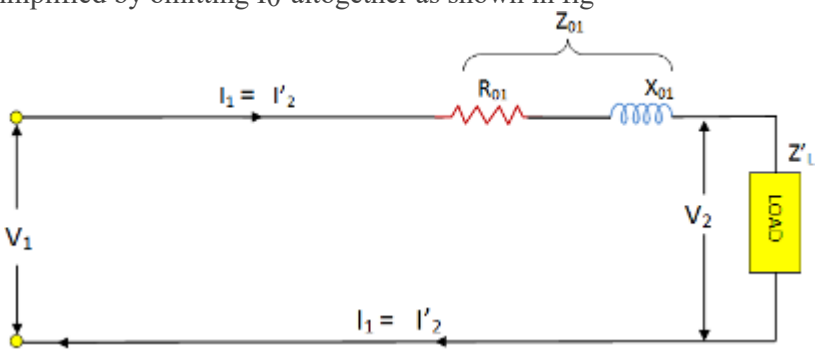

Phasor Diagrams for Transformer on Load

Consider a transformer supplying the load as shown in the figure. The various transformer parameters are.

R_1= Primary winding resistance, X_1 = Primary leakage reactance

R_2 = Secondary winding resistance, X_2 = Secondary leakage reactance

Z_L = Load impedance, I_1 = Primary current

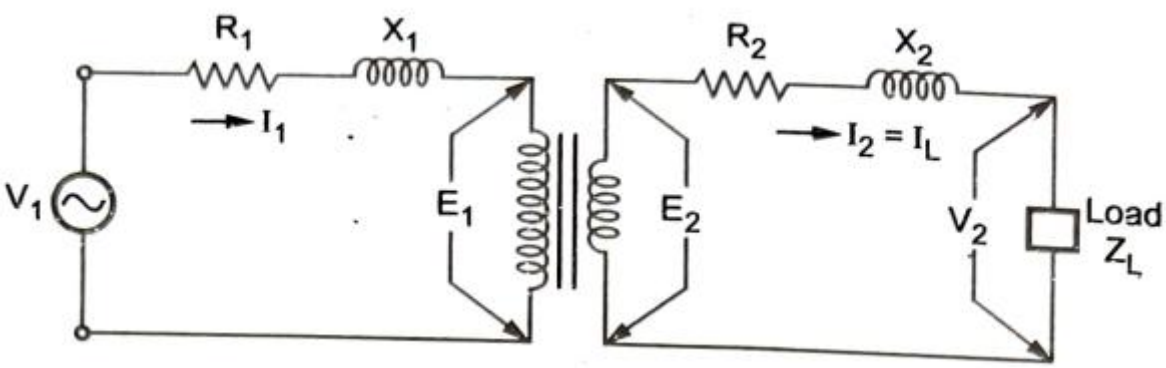

I_2 =Secondary current = I_L = Load current

Now $\bar{I}_1 = \bar{I}_0 + \bar{I}'_2$

I_0 = No load current

I_2' = Load component of current decided by the load = K I_2

The primary voltage V_1 has now three components,

1. - E_1, yje induced emf which opposes V_1.
2. $I_1 R_1$, the drop across the resistance, in phase with I_1.
3. $I_1 X_1$, the drop across the reactance, leading I_1 by 90^0.

$$\overline{V}_1 = -\overline{E}_1 + \overline{I_1R_1} + \overline{I_1X_1} = -\overline{E}_1 + \overline{I}_1 (R_1 + j X_1)$$

$$\boxed{\overline{V}_1 = -\overline{E}_1 + \overline{I_1Z_1}}$$

The secondary induced e.m.f. E_2 has also three components,

1. V_2, the terminal voltage across the load.
2. $I_2 R_2$, the drop across the resistance, in phase with I_2.
3. $I_2 X_2$, the drop across the reactance, leading I_2 by 90^0

$$\overline{E}_2 = \overline{V}_2 + \overline{I_2R_2} + \overline{I_2X_2}$$

$$\overline{V}_2 = \overline{E}_2 - \overline{I}_2 (R_2 + j X_2) = \boxed{\overline{E}_2 - \overline{I_2Z_2}}$$

The phasor diagram for the transformer on load depends on the nature of the load power factor.

Unity Power Factor Load, cos $Ø_2$ = 1

As load power factor is unity, the voltage V_2 and I_2, are in phase.

1. Consider flux Ø as reference.
2. E_1 lags Ø by 90^0. Reverse E_1 to get – E_1.
3. E_1 and E_2 are in phase.
4. Assume V_2 in a particular direction.
5. I_2 is in phase with V_2.
6. Add $I_2 R_2$ and $I_2 X_2$ to V_2 to get E_2.
7. Reverse I_2, to get I_2'.
8. Add I_0 and I_2' to get I_1.
9. Add $I_1 R_1$ and $I_1 X_1$ to – E_1 to get V_1.
10. Angle between V_1 and I_1 is $Ø_1$ and cos $Ø_1$ is primary power factor.
11. Remember that $I_1 X_1$ leads I_1 direction by 90° and $I_2 X_2$ leads $I_2$by 90° as Current through inductance lags voltage across inductance by 90°

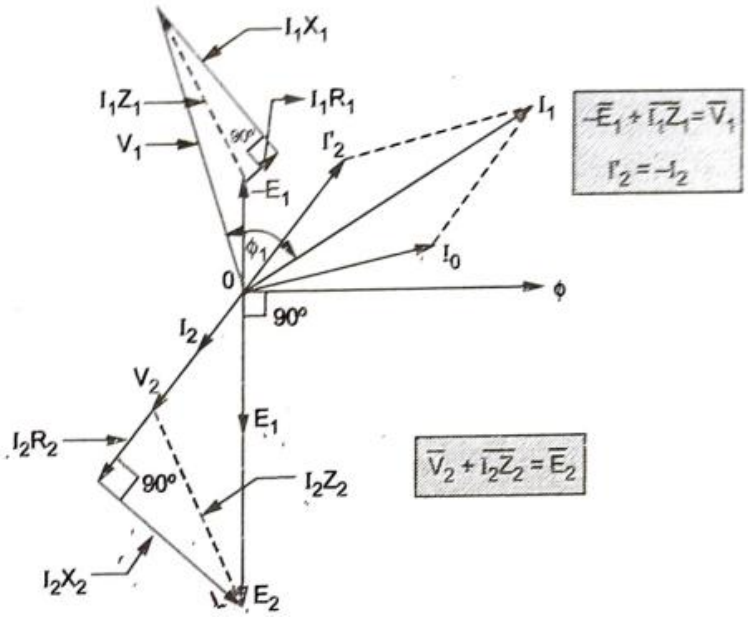

Lagging Power Factor Load, cos Ø$_2$

As load power factor is lagging cos Ø$_2$, the current I_2 lags V_2 by angle Ø$_2$. So only change in drawing the phasor diagram is to draw I_2 lagging V_2 by Ø$_2$ in step 5 discussed earlier. Accordingly directions of I_2 R_2, I_2 X_2, I_2', I_1, I_1 R_1 and I_1 X_1, will change. Remember that whatever may be the power factor of load, I_2 X_2 leads I_2 by 90° and I_1 X_1, leads I_1 by 90^0.

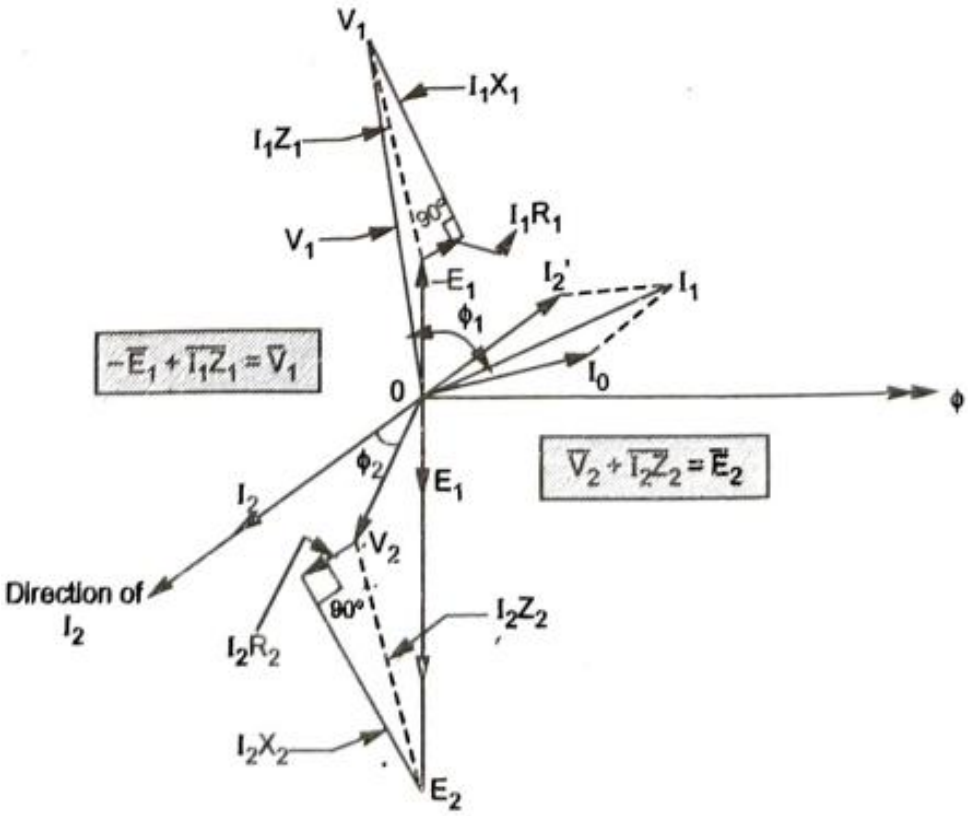

Leading Power Factor Load, cos Ø$_2$

As load power factor is leading, the current I_2 leads V_2 by angle Ø$_2$. So the change is to draw I_2 leading V_2 by angle Ø$_2$. All other steps remain same as before.

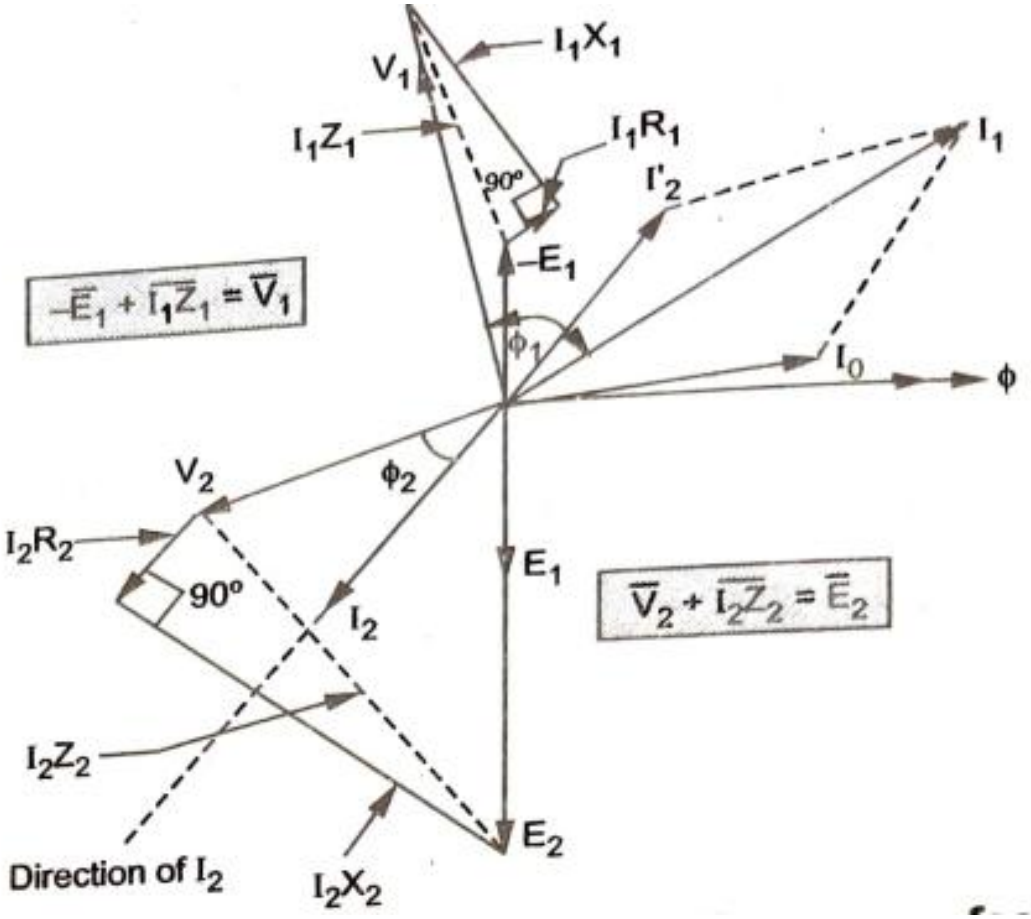

Voltage Regulation:

Because of the voltage drop across the primary and secondary impedances it is observed that the secondary terminal voltage drops from its no load value (E_2) to load value (V_2) as load and load current increases. This decrease in the secondary terminal voltage expressed as a fraction of the no load secondary terminal voltage is called regulation of a transformer.

Let, E_2 = Secondary terminal voltage on no load

V_2 = Secondary terminal voltage on given load

Then mathematically voltage regulation at given load can be expressed as,

$$\% \text{ voltage regulation} = \frac{E_2 - V_2}{V_2} \times 100$$

The ratio $((E_2 - V_2) / V_2)$ is called per unit regulation.

The secondary terminal voltage does not depend only on the magnitude of the load current but also on the nature of the power factor of the load. If V_2 is determined for full load and specified power factor condition the regulation is called full load regulation.

As load current I_L increases, the voltage drops tend to increase and V_2 drops more and more. In case of lagging power factor $V_2 < E_2$ and we get positive voltage regulation, while for leading power factor $E_2 < V_2$ and we get negative voltage regulation.

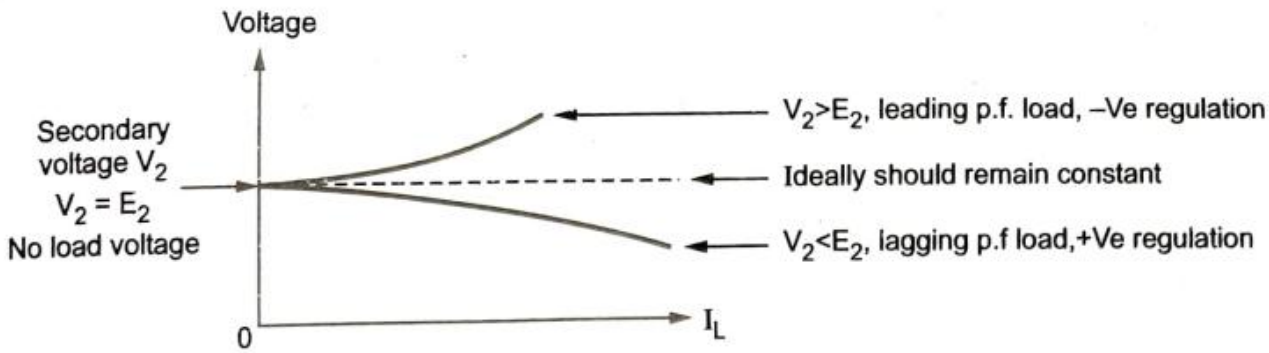

Expression for Voltage Regulation:

$$\% R = \frac{E_2 - V_2}{V_2} \times 100 = \frac{\text{Total voltage drop}}{V_2} \times 100$$

Open-Circuit or No-Load Test:

This test is conducted to determine the iron losses (or core losses) and parameters R_0 and X_0 of the transformer. In this test, the rated voltage is applied to the primary (usually low-voltage winding) while the secondary is left open circuited. The applied primary voltage V_1 is measured by the voltmeter, the no load current I_0 by ammeter and no-load input power W_0 by wattmeter as shown in Fig. As the normal rated voltage is applied to the primary, therefore, normal iron losses will occur in the transformer core. Hence wattmeter will record the iron losses and small copper loss in the primary. Since no-load current I_0 is very small (usually 2-10 % of rated current). Cu losses in the primary under no-load condition are negligible as compared with iron losses. Hence, wattmeter reading practically gives the iron losses in the transformer. It is reminded that iron losses are the same at all loads.

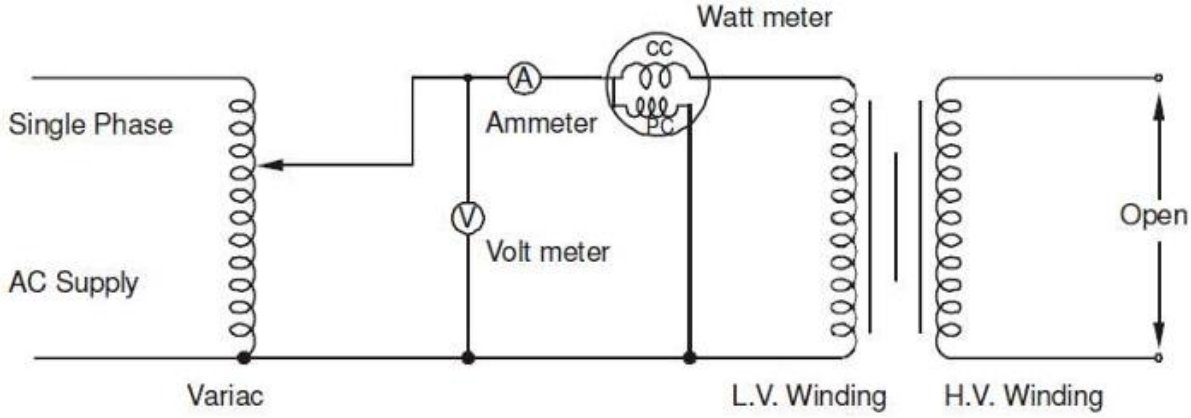

Iron losses, P_i = Wattmeter reading = W_0
No load current = Ammeter reading = I_0
Applied voltage = Voltmeter reading = V_1

Input power, $W_0 = V_1 I_0 \cos \phi_0$

No - load p.f., $\cos\phi = \frac{Wo}{Vo\,Io}$ = no load power fact

$I_m = I_o \sin \phi_o$ = magnetizing component
$I_c = I_o \cos \phi_o$ = Active component

$R_o = \frac{Vo}{Ic}\ \Omega, \quad X_o = \frac{Vo}{Im}\ \Omega$

Under no load conditions the PF is very low (near to 0) in lagging region. By using the above data we can draw the equivalent parameter shown in Figure

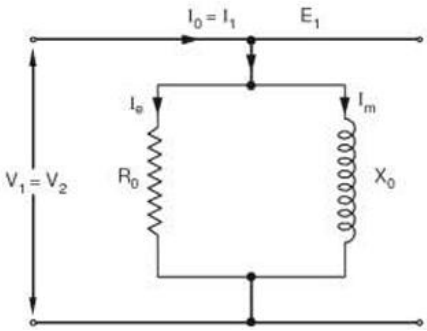

Thus open-circuit test enables us to determine iron losses and parameters R_0 and X_0 of the transformer.

Short-Circuit or Impedance Test

This test is conducted to determine R_{1e} (or R_{2e}), X_{1e} (or X_{2e}) and full-load copper losses of the transformer. In this test, the secondary (usually low-voltage winding) is short-circuited by a thick conductor and variable low voltage is applied to the primary as shown in Fig. The low input voltage is gradually raised till at voltage V_{SC}, full-load

current I_1 flows in the primary. Then I_2 in the secondary also has full-load value since $I_1/I_2 = N_2/N_1$. Under such conditions, the copper loss in the windings is the same as that on full load. There is no output from the transformer under short-circuit conditions. Therefore, input power is all loss and this loss is almost entirely copper loss. It is because iron loss in the core is negligibly small since the voltage V_{SC} is very small. Hence, the wattmeter will practically register the full load copper losses in the transformer windings.

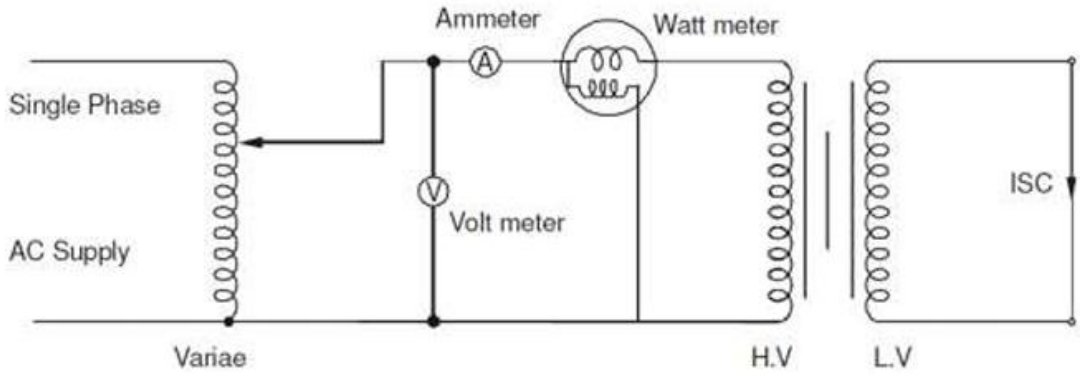

Full load Cu loss, PC = Wattmeter reading = W_{sc}
Applied voltage = Voltmeter reading = V_{SC}
F.L. primary current = Ammeter reading = I_1

$Pcu = I_1^2R_1 + I_1^2 R_2' = I_1^2 R_{1e}$, $R_{1e} = \frac{Pcu}{I1^2}$

Where R_{1e} is the total resistance of transformer referred to primary.

Total impedance referred to primary, $Z1e = \sqrt{Z1e^2 - R1e^2}$,

short – circuit P.F, $\cos \Phi = \frac{Pcu}{Vsc\ I1}$ Thus short-circuit lest gives full-load Cu loss, R1e and X1e.

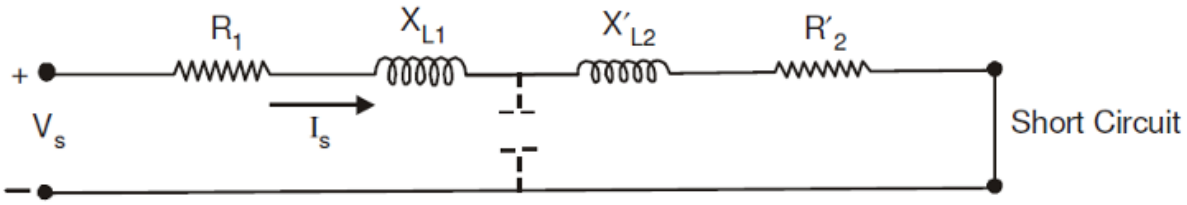

equivalent resistance $R_{eq} = \frac{W_s}{I_s^2} = R_1 + R_2'$

and equivalent impedance $Z_{eq} = \frac{V_s}{I_s}$

So we calculate equivalent reactance

$$X_{eq} = \sqrt{Z_{eq}^2 - R_{eq}^2} = X_{L1} + X'_{L2}$$

These R_{eq} and X_{eq} are equivalent resistance and reactance of both windings referred in HV side. These are know as equivalent circuit resistance and reactance.

All Day Efficiency:

Heavy duty transformers are **classified** into power transformers and distribution transformers. Power transformers are used at the power generation stations and are operated as per need. In a power station there may be number of generators and transformers. Power transformers will be operated depending on the power generated. Thus, in a particular instant all the power transformers may not be put in use. Distribution transformers on the other hand are used in electrical network systems for power distribution. These have to beoperated round the day (24 hours). There will be power loss due to operation of such transformers. The energyefficiency of these transformers is measured considering a 24 hour operation and is known as All day efficiency

$$\eta\ (all\ day) = \frac{Output\ of\ transformer\ in\ 24\ hour\ (kWh)}{Input\ to\ transformer\ in\ 24\ hour\ (kWh)}$$

Polarity Test of Transformer:

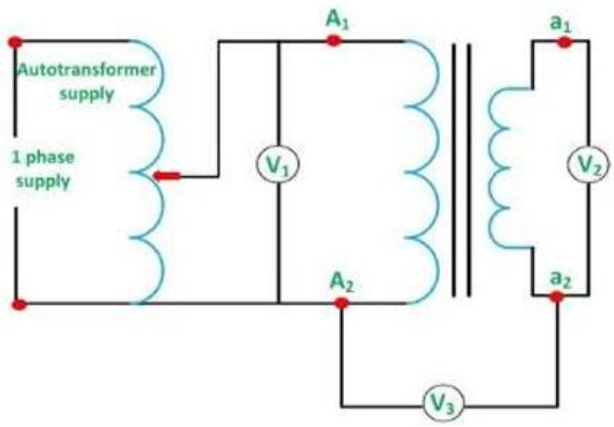

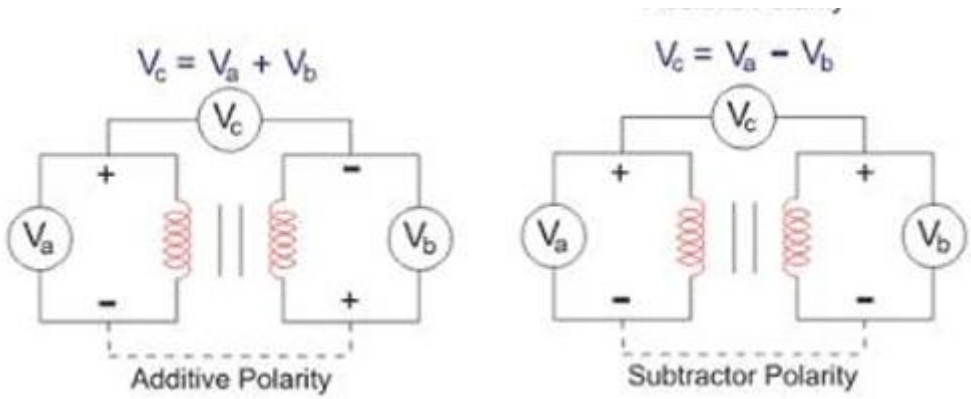

Current flows from high voltage point to low voltage point due to the potential difference between them. Here, electrical polarity comes into the picture. Electrical polarity simply describes the direction of the current flow. When we look into DC system, we find that one pole is always positive and the other one is always negative that imply that the current flows in one direction only. But when we look into an AC system, the terminals are changing their polarity periodically, and the direction of the current also changes accordingly. We use dot convention to identify the voltage polarity of the mutual inductance of two windings. The two used conventions are:

1. If a current enters the dotted terminal of one winding, then the voltage induced on the other winding will be positive at the dotted terminal of the second winding.
2. If a current leaves the dotted terminal of one winding, then the polarity of the voltage induced in the other winding will be negative at the dotted terminal of the second winding.

When we look into the operations of the distribution transformers, we find that they need to work all the time and also need to supply at high demand at peak times. So, to cope up with these situations, we connect the transformers in parallel.

Paralleling is done by connecting same polarity terminals of the primary winding together. A similar procedure is done for the secondary winding. Paralleling will increase the power supplying capacity and also the reliability of the system. We do polarity test on parallel transformers to ensure that we connect the same polarity windings and not the opposite ones. If we accidentally connect the opposite polarities of the windings, it will result in a short circuit and eventually damage the machine.

We can categorise the polarity of the transformer to two types,

1. Additive Polarity
2. Subtractive Polarity

Additive Polarity: In additive polarity, the voltage (V_c) between the primary side (V_a) and the secondary side (V_b) will be the sum of both high voltage and the low voltage, i.e. we will get $V_c = V_a + V_b$

Subtractive Polarity:

In subtractive polarity, the voltage (V_c) between the primary side (V_a) and the secondary side (V_b) will be the difference of both high voltage and the low voltage, i.e. we will get $V_c = V_a – V_b$ In subtractive polarity, if $V_c = V_a – V_b$, it is a step-down transformer and if $V_c = V_b – V_a$, it is a step-up transformer.

We use additive polarity for small-scale distribution transformers and subtractive polarity for large-scale transformers.

Procedure of Polarity Test of Transformer:

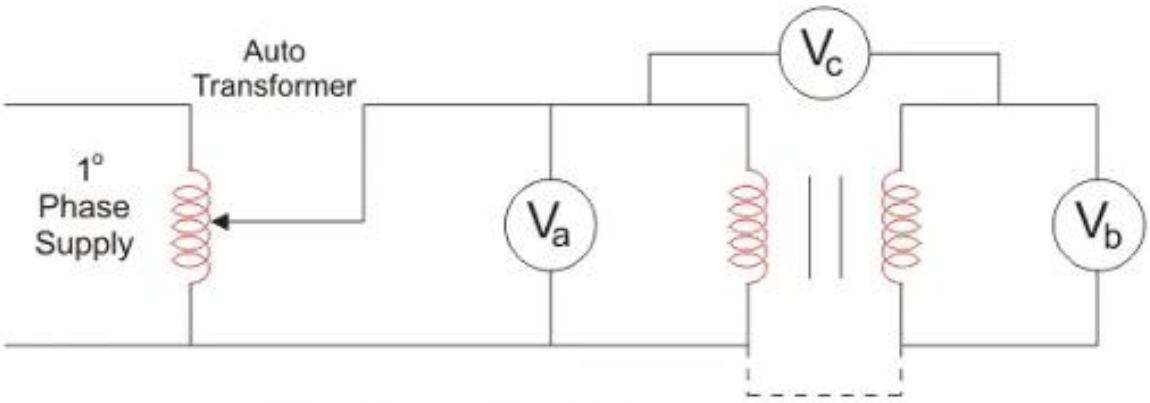

Transformer Circuit Diagram for Test

1.Connect the circuit as shown above with a voltmeter (Va) across primary winding and another voltmeter (Vb) across the secondary winding.
2. If available, take down the ratings of the transformer and the turn ratio.
3. We connect a voltmeter (Vc) between primary and secondary windings.
4. We apply some voltage to the primary side.

5. By checking the value in the voltmeter (Vc), we can find whether it is additive or subtractive polarity.
If additive polarity – Vc should be showing the sum of Va and Vb.
If subtractive polarity – Vc should be showing the difference between Va and Vb.
Caution: Be careful that the max. measuring the voltage of voltmeter Vc should be greater than the sum of Va (Primary winding) and Vb (Secondary winding) otherwise during the additive polarity, the sum of Va and Vb comes across it.
Note: If we require additive polarity, but we have subtractive polarity, we can simply change it by keeping any of the primary or secondary windings in the same fashion and reversing the winding connection of the other one. Similarly, if we require subtractive polarity but have additive polarity, we could do the same procedure as above.1

Sumpner's test:

Sumpner's test or back to back test on transformer is another method for determining transformer efficiency, voltage regulation and heating under loaded conditions. Short circuit and open circuit tests on transformer can give us parameters of equivalent circuit of transformer, but they can not help us in finding the heating information. Unlike O.C. and S.C. tests, actual loading is simulated in Sumpner's test. Thus, the Sumpner's test gives more accurate regulation and efficiency results than O.C. and S.C. tests.
Sumpner's test or back to back test can be employed only when two identical transformers are available. Both transformers are connected to supply such that one transformer is loaded on another. Primaries of the two identical transformers are connected in parallel across a supply. Secondaries are connected in series such that emf's of them are opposite to each other. Another low voltage supply is connected in series with secondaries to get the readings, as shown in the circuit diagram shown below.

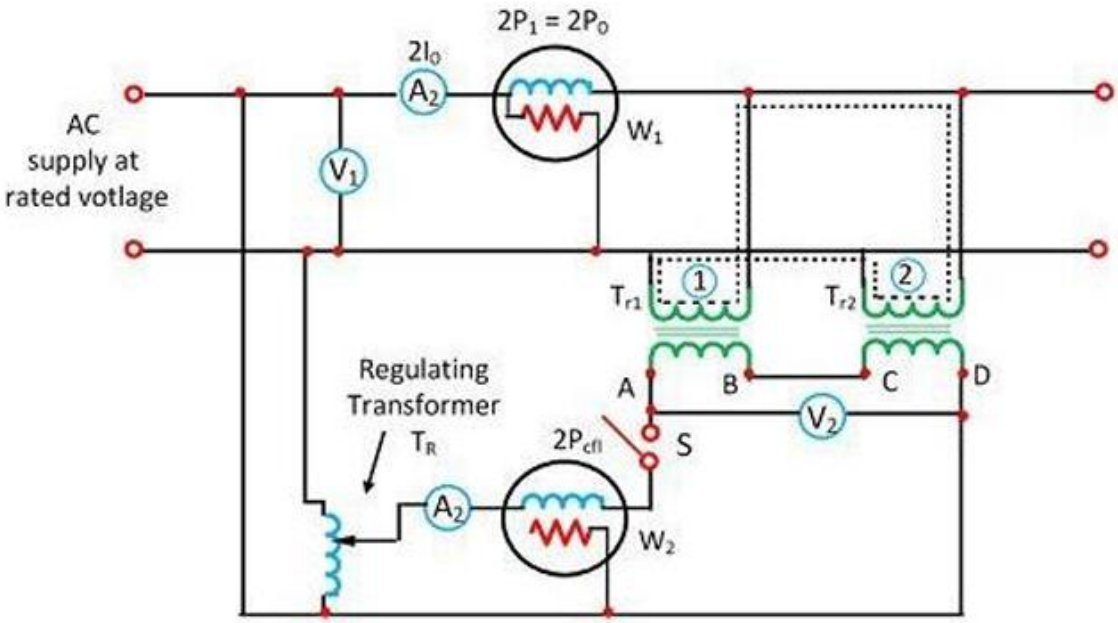

Back-to-back test on two identical single-phase transformers

In above diagram, T_1 and T_2 are identical transformers. Secondaries of them are connected in voltage opposition, i.e. E_{EF} and E_{GH}. Both the emf's cancel each other, as transformers are identical. In this case, as per superposition theorem, no current flows through secondary. And thus the no load test is simulated. The current drawn from V_1 is $2I_0$, where I0 is equal to no load current of each transformer. Thus input power measured by wattmeter W_1 is equal to iron losses of both transformers. i.e. iron loss per transformer $P_i = W_1/2$.

Now, a small voltage V_2 is injected into secondary with the help of a low voltage transformer. The voltage V_2 is adjusted so that, the rated current I_2 flows through the secondary. In this case, both primaries and secondaries carry

rated current. Thus short circuit test is simulated and wattmeter W_2 shows total full load copper losses of both transformers.
i.e. copper loss per transformer $P_{Cu} = W_2/2$.
From above test results, the **full load efficiency** of each transformer can be given as –

$$\text{\% full load efficiency of each transformer} = \frac{\text{output}}{\text{output} + \frac{W_1}{2} + \frac{W_2}{2}} \times 100$$