Module-2

Syllabus:
Three-phase Transformers: *Introduction, Constructional features of three-phase transformers. Transformer connection for three-phase operation– star/star, delta/delta, and star/delta, comparative features. Labelling of three-phase transformer terminals.*
Parallel Operation of Transformers: *Necessity of Parallel operation, conditions for parallel operation– Single phase and three phases. Load sharing in case of similar and dissimilar transformers. Numerical.*
Autotransformers and Tap changing transformers: *Introduction to autotransformer-copper economy, equivalent circuit, no load, and on-load tap changing transformers. Numerical.*

2a. Three-Phase Transformers

Introduction, Constructional features of three-phase transformers.

The three-phase system is used to generate, transmit, and distribute electrical power. It generates power on a large scale to meet the needs of industries and commercial establishments. Three identical single-phase transformers are connected suitably or combined on a single core to form a three-phase system. Based on various types of industrial needs, the step-up and step-down transformers are employed for generating, transmission, and distributing the electric power. The building of a three-phase transformer unit is economicalas it consumes less material compared to connecting three individual single-phase transformers. Additionally, the three-phase system transfers AC power instead of DC and is simple to construct.

A three-phase transformer consists of three primary coils and three secondary coils and is represented as 3- phase or 3ϕ. A three-phase system can be constructed using three individual identical single-phase transformers, and such a 3-phase transformer is known as the bank of three transformers. On the other hand, the three-phase transformer can be built on a single core. The windings of a transformer can be connected in either delta or wye configurations. The working of the 3-phase system is similar to a single-phase transformer,and they are normally employed in power generation plants.

Core Type Construction:

In this type of construction, there are three cores and two yokes. Each core has both primary and secondary windings wounded spirally as shown in the figure. Each leg of the core carries high voltage as well as low voltage windings. The core is laminated to minimize eddy current losses on core and yoke. As it is easier to laminate low voltage (LV) winding than the high voltage (HV) winding. The LV windings are positioned nearthe core with appropriate insulation and oil ducts in between them

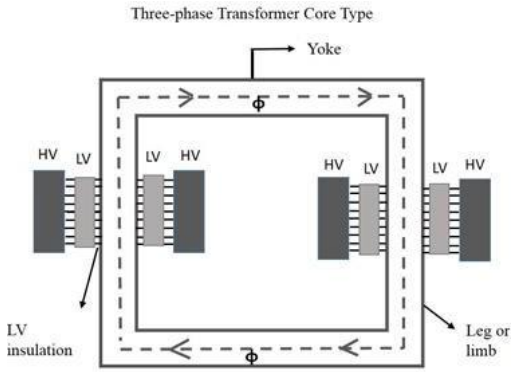

whereas, the HV windings are placed abovethe LV windings with appropriate insulation and oil ducts between them.

Shell Type Transformer:

The three-phase shell type transformer is generally constructed by stacking three individual single-phase transformers. Three phases of a shell-type transformer are independent than the core-type transformer, while each phase has an individual magnetic circuit. These magnetic circuits are parallel to each other and flux induced by each winding is in phase. Shell type transformer is highly preferred as the voltage waveforms are less distorted.

Shell Type Transformer

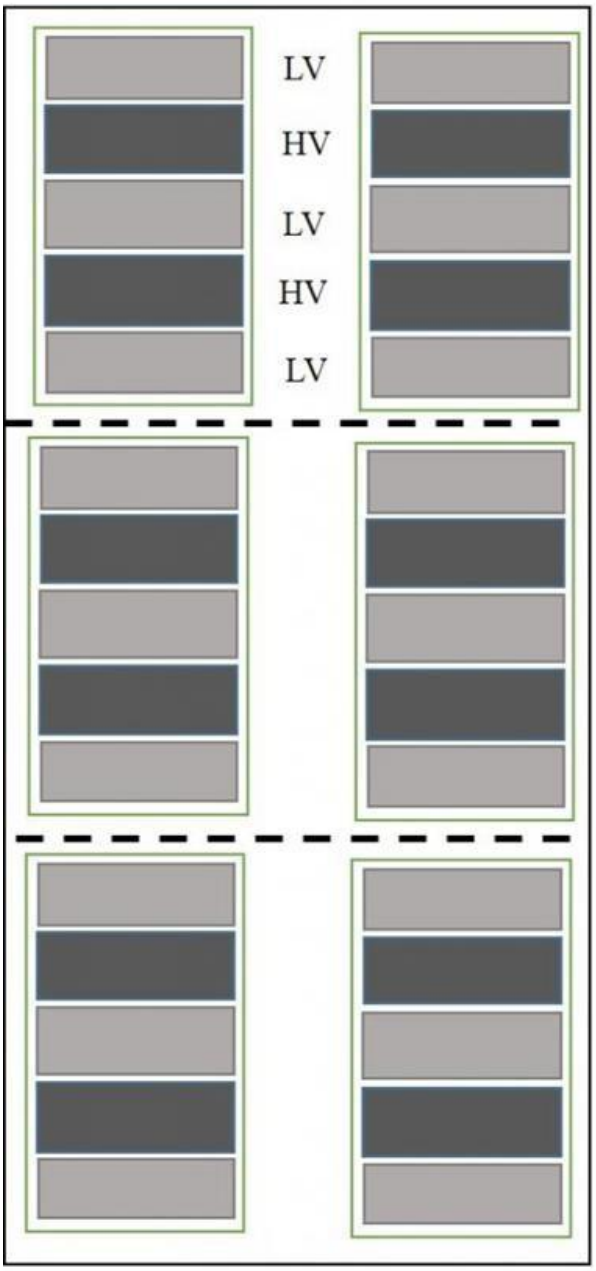

Working of Three-Phase Transformers

The figure below shows the three-phase transformer, wherein three cores are placed at 120˚ from each other. This figure is simplified to show only primary windings and their connection to the three-phase power supply.As soon as the three-phase supply is excited, the currents IR, IY, and IB are carried by the primary windings and thus inducing the fluxes ϕR, ϕY, and ϕB individually in each core. The center leg will carry the sum of allthe fluxes, and the center leg combined all the legs of a core.

For instance, if the sum of the currents IR+IY+IB is zero in a three-phase system, then the sum of all the threefluxes also becomes zero, resulting in the center leg carrying no flux. Therefore, removing the center leg makesno difference for other transformer conditions.

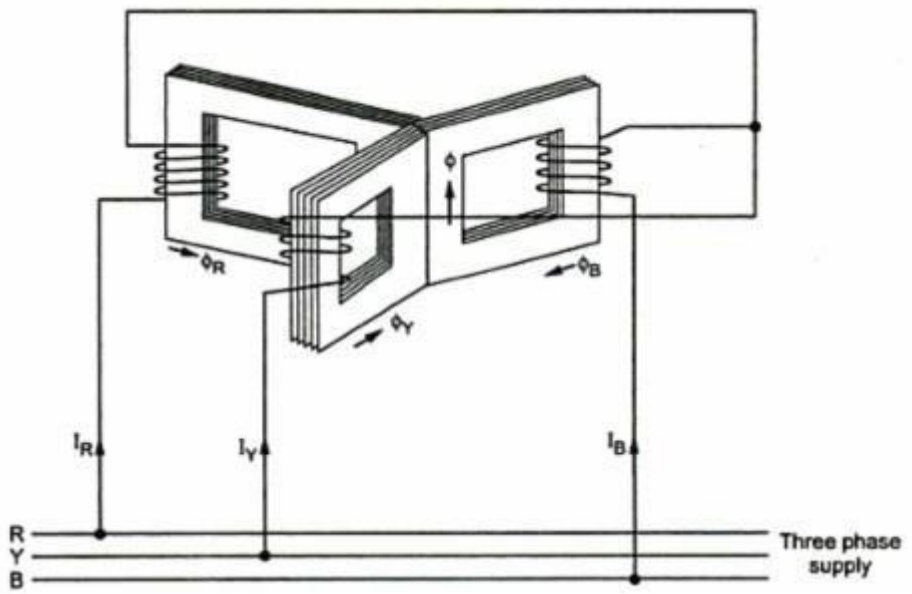

Choice between single unit three-phase transformer and a bank of three single-phase transformers:

We know that the very basic purpose of a Transformer is to transmit power at two different voltage levels. For example, if a generating station is generating electrical power at 21 kV and evacuates it power at 400 kV thena three-phase transformer of voltage rating 21 kV / 400 kV is used. But the question that arises here is whetherwe should opt for a single three-phase Transformer or bank of three single-phase Transformer. Well, mostly you might have seen a single three-phase transformer due to economy. But this does not mean that a bank of three single-phase transformers is never used. If ever you get a chance to visit 700 MW or 1000 MW power plant, you will see the use of a bank of three single-phase transformers instead of a single three-phase transformer.Generally, for large power-generating units, bank of 3 single-phase transformers is preferred. The main reasonis the size and transportation. Let us take an example for better understanding. Consider a 700 MW generating station where we need to choose a generator transformer (GT) to evacuate power to 400 kV Grid.

The size ofa single three phase transformer of 823 MVA (700 / 0.85) will be quite high and hence will not be easily transportable from the Transformer factory to the site. Thus for this case, bank of three single-phase transformersis used. There are many other advantages of using bank of three single-phase transformers like the ease in maintenance, less cost of spare inventory requirement etc.

Difference between Single-Phase and Three-Phase Transformers:

Bank of 3 Single Phase Transformer	Single Three Phase Transformer
It is more expensive due to requirement of 3 single phase transformer. 3 single phase transformer means requirement of more iron for core, oil and accessories.	It is quite economic due to the use of less iron core, less volume of tank and hence less volume of Transformer Oil.
In such case star or delta connection on HV side requires six different HV Bushings to bring out the HV terminals of 3 single phase transformers.	This only requires three / four HV Bushings as the delta / star connection is done inside the tank of transformer.
Space requirement is more for installation.	Less space requirement for installation.
It offers greater flexibility in erection and installation.	Due to single unit, it doesn't have any flexibility in erection and installation.
The spare inventory cost is less. Only one single phase transformer is required as spare which is less costly. Suppose a generating station has 2 generating units. For both the generating units (2xbank of three single phase transformer), only one single phase transformer is required as spare.	The cost of single three phase transformer as spare is quite high when compared with a single unit of single phase transformer.
The maintenance becomes easier due to separate units. Replacement of single unit is also easy.	It is quite difficult to repair and replace.
This is less efficient due to losses in the three units. The losses are more due to use of more iron core.	It is more efficient and losses are less due to lesser requirement of iron core.

Three-Phase Transformer Connection:

Primary and secondary windings of three phase transformers as three phase windings can be connected in different ways such as in star or delta.

1. Star-Star (Y-Y) connection 2. Delta – Delta (Δ - Δ) connection

3. Star-Delta (Y - Δ) connection 4. Delta-Star (Δ - Y) connection

5. Open Delta or V connection 6. Scott connection or T-T connection

Star-Star Connection:

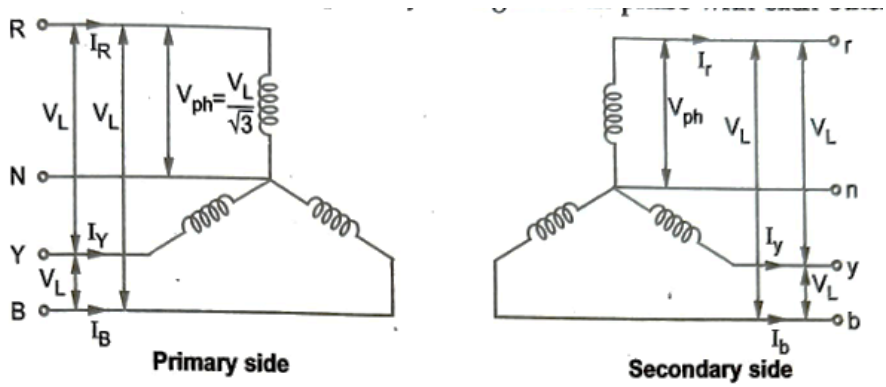

In this type of connection, both the primary and secondary windings are connected in star as shown in above Fig. This connection proves to be economical for small high voltage transformers as phase voltage is $1|\sqrt{3}$ times that of line voltage, the number of turns per phase and the quantity of insulation required is minimum. The ratio of line voltages on the primary and secondary sides is the same as the transformation ratio of each transformer.

The main difficulty with this type of connection is that it can work satisfactorily if the load is balanced. But the neutral point shifts which makes phase voltages unequal if the load is unbalanced.

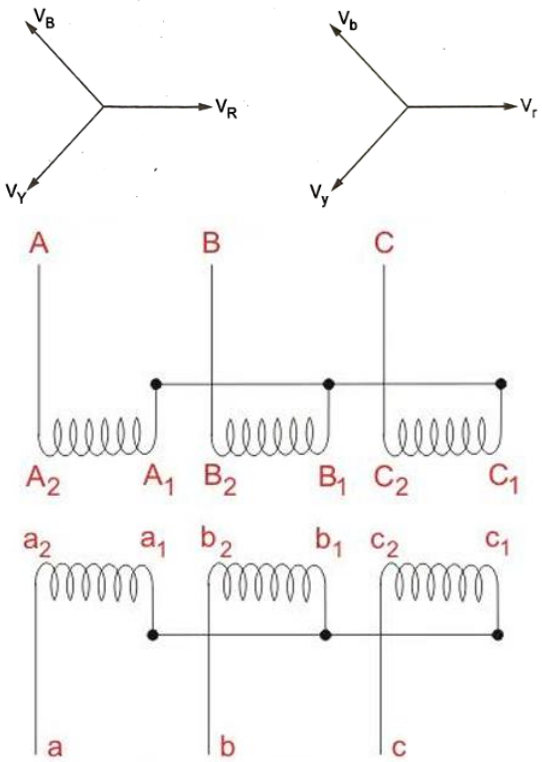

Star-Star Three Phase Transformer

Star-star transformer is formed in a 3 phase transformer by connecting one terminal of each phase of

individual side, together. The common terminal is indicated by the suffix 1 in the figure below. If terminal with suffix 1 in both primary and secondary are used as common terminal, voltages of primary and secondary are in the same phase. That is why this connection is called a degree connection or 0^0 – connection.
If the terminals with suffix 1 is connected together in HV side as common point and the terminals with suffix 2 in LV side are connected together as common point, the voltages in primary and secondary will be in opposite phase. Hence, star-star transformer connection is called 180^0-connection, of three phase transformer.

$$V_{ph1} = \frac{V_{L1}}{\sqrt{3}}$$

If K is the turn-or transformation ratio then the phase voltage on the secondary side is given as,

Secondary Phase Voltage,

$$V_{ph2} = K\left(\frac{V_{L1}}{\sqrt{3}}\right) \text{ as } \frac{V_{ph2}}{V_{ph1}} = K$$

The line voltage V_{L2} on secondary side given as,

$$V_{L2} = \sqrt{3}\, V_{ph2} = \sqrt{3}\, K\left(\frac{V_{L2}}{\sqrt{3}}\right) = K\, V_{L1}$$

Advantages:

1. Due to star connection, phase voltage is $1\sqrt{3}$ times line voltage. Hence less number circuits of turns are required. Also the stress on insulation is less. This makes the connection economical for small high-voltage purposes.
2. Due to the star Connection, phase current is the same as line current. Hence windings have to carry high currents. This makes the cross-section of the windings high. Thus the windings are mechanically strong and windings can bear heavy loads and short-circuit
3. There is no phase shift between the primary. and secondary voltages.
4. As neutral is available, it is suitable for a three-phase, four-wire system.

Disadvantages:

1. If the load on the secondary side is unbalanced then the performance of this connection is not satisfactory then the shifting of the neutral point is possible. To prevent this, the star point of the primary is required to be connected to the star point of the generator.
2. Even though the star or neutral point of the primary is earthed, the third harmonic present in the alternator voltage may appear on the secondary side. This causes distortion in the secondary phase voltages.

Delta-Delta Connection:

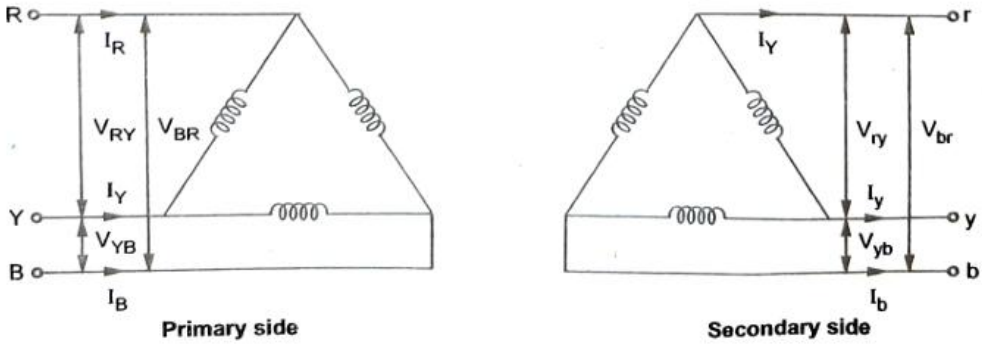

In this type of connection, both the three-phase primary and secondary windings are connected in delta as shown in the above Fig.

The voltages on primary and secondary sides can be shown on the phasor diagram as shown in the below Fig.

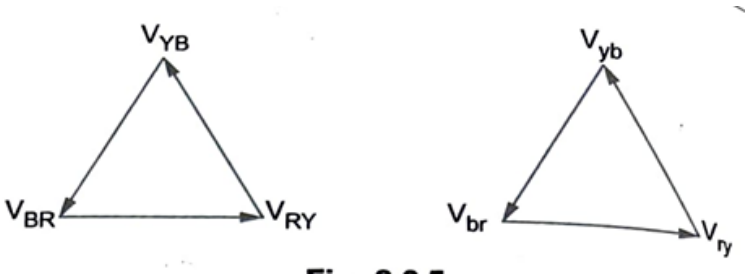

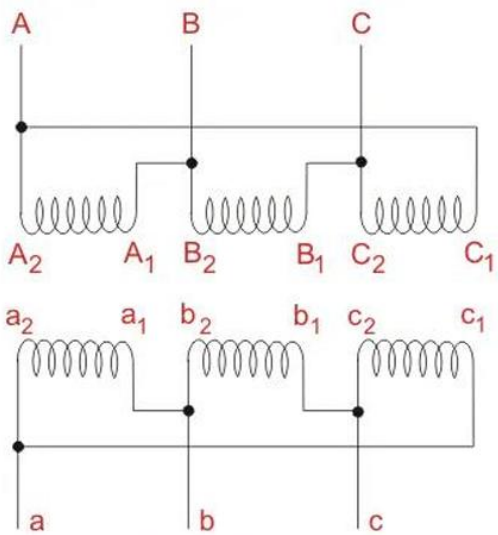

Delta-Delta Three Phase Transformer

In delta-delta transformer, 1 suffixed terminals of each phase primary winding will be connected with 2 suffixed terminal of next phase primary winding.

If primary is HV side, then A_1 will be connected to B_2, B_1 will be connected to C_2 and C_1 will be connected to A_2. Similarly in LV side 1 suffixed terminals of each phase winding will be connected with

2 suffixed terminals of next phase winding. That means, a_1 will be connected to b_2, b_1 will be connected to c_2 and c_1 will be connected to a_2.

If transformer leads are taken out from primary and secondary 2 suffixed terminals of the winding, then there will be no phase difference between similar line voltages in primary and secondary. This delta delta transformer connection is zero degree connection or 0^0-connection. But in the LV side of the transformer, if, a_2 is connected to b_1, b_2 is connected to c1 and c_2 is connected to a1. The secondary leads of the transformer are taken out from 2 suffixed terminals of LV windings, and then similar line voltages in primary and secondary will be in phase opposition. This connection is called 180^0-connection, of three phase transformer.

Let, V_{L1} = Line voltage on primary side

V_{L2} = Line voltage on secondary side

V_{ph1} = Phase voltage on primary side

V_{ph2} = Phase voltage on secondary side

K = Transformation ratio

For, delta connection, $V_{L1} = V_{ph1}$

Now since $\frac{V_{ph2}}{V_{ph1}} = K$

$\therefore$ $V_{ph2} = K V_{ph1}$

But again since secondary is connected in delta

$V_{L2} = V_{ph2} = K V_{L1}$

Advantages:

1. In order to get secondary voltage as sinusoidal, the magnetizing current of transformer must contain a third harmonic component. The delta connection provides a closed path for the circulation of the third harmonic component of the current. The flux remains sinusoidal which results in sinusoidal voltages.
2. Even if the load is unbalanced the three-phase voltages remain constant. Thus it allows unbalanced loading also.
3. The important advantage with this type of connection is that if there is a bank of single-phase transformers connected in delta-delta fashion and if one of the Transformers is disabled then the supply can be continued with the remaining two of course with reduced efficiency.
4. There is no distortion in the secondary voltages. Due to the delta connection, phase voltage is same as line voltage hence windings have more turns. But phase current is

$1/\sqrt{3}$ times the line current. Hence the cross section of the windings is very low. This makes the connection economical for low voltage & and transformers.

Disadvantages:

1. Due to the absence of a neutral point it is not suitable for three three-phase four wire system.

Star-delta transformer:

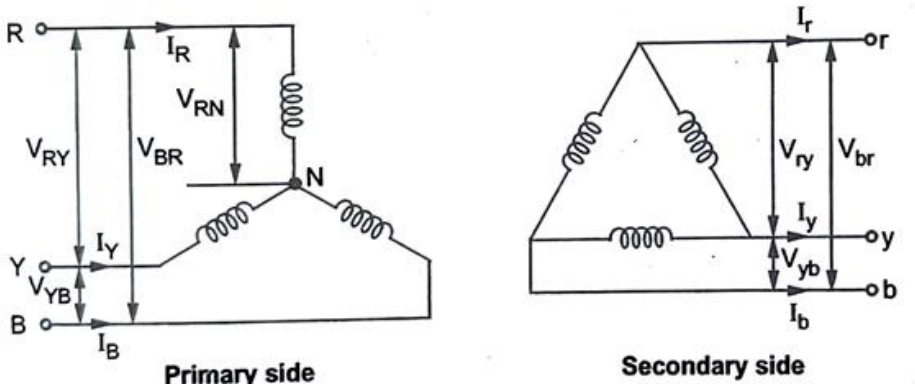

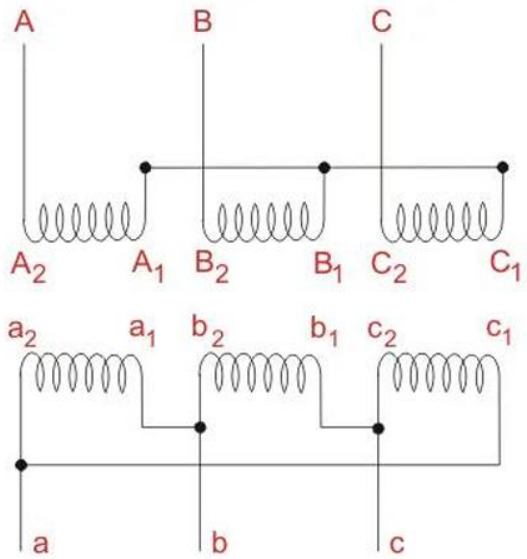

Star-Delta Three Phase Transformer

Here in star-delta transformer, star connection in HV side is formed by connecting all the 1 suffixed terminals together as common point and transformer primary leads are taken out from 2 suffixed terminals of primary.

The delta connection in LV side is formed by connecting 1 suffixed terminals of each phase LV winding with 2 suffixed terminal of next phase LV winding. More clearly, a1 is connected to b2, b1 is connected to c_2 and c_1 is connected to a_2. The secondary (here it considered as LV) leads are taken out from 2 suffixed ends of the secondary windings of transformer. The transformer connection diagram is shown in the figure beside. It is seen from the figure that the sum of the voltages in delta side is zero. This is a must as otherwise closed delta would mean a short circuit. It is also observed from the phasor diagram

that, phase to neutral voltage (equivalent star basis) on the delta side lags by − 30o to the phase to neutral voltage on the star side; this is also the phase relationship between the respective line to line voltages. This star delta transformer connection is therefore known as – 30^0-connection. Star-delta + 30^0-connection is also possible by connecting secondary terminals in following sequence. a_2 is connected to b_1, b_2 is connected to c1 and c_2 is connected to a_1. The secondary leads of transformer are taken out from 2 suffixed terminals of LV windings.

Let, V_{L1} = Line voltage on primary side

V_{L2} = Line voltage on secondary side

V_{ph1} = Phase voltage on primary side

V_{ph2} = Phase voltage on secondary side

K = Transformation ratio.

$$V_{ph1} = \frac{V_{L1}}{\sqrt{3}}$$

Now, $$\frac{V_{ph2}}{V_{ph1}} = K$$

$$\therefore \quad V_{ph2} = K\,V_{ph1} = K\frac{V_{L1}}{\sqrt{3}}$$

Since secondary is connected in delta.

$$V_{ph2} = V_{L2}$$

$$V_{L2} = K\frac{V_{L1}}{\sqrt{3}} = \left(\frac{K}{\sqrt{3}}\right)V_{L1}$$

Advantages:

1. The primary side is star connected. Hence fewer turns are required. This makes the connection economical for large high-voltage step-down power transformers.
2. The neutral available on the primary can be earthed to avoid distortion.
3. Large unbalanced loads can be handled satisfactorily.

Disadvantages: In this type of connection, the secondary voltage is not in phase with the primary. Hence it is not possible to operate this connection in parallel with star-star or delta-delta connected transformer.

Comparative statement of star/star, delta/delta, and star/delta:

In the three-phase transformers, the phase voltage ratio is the same as the turn ratio. However, due to the different types of connections, the ratio of line voltages is different relationships between voltages and currents for various types of connections.

1. The primary line voltage is V_L volts.

2. The primary line current is I_L amperes.
3. Phase transformation ratio is K,
   $K = \frac{V_2}{V_1} = \frac{N_2}{N_1}$ Where V_2 and V_1 are phase voltages.
4. Loads are balanced.
5. Loads are purely resistive i.e. having unity power factor
6. Thore are no losses and the transformers are ideal in behaviour.

Type of connection	Primary Side			Secondary Side			
	Line voltage	Phase voltage	Phase Current	Phase Voltage	Phase Current	Line voltage	Line Current
Star-Star	V_L	$\frac{V_L}{\sqrt{3}}$	I_L	$\frac{KV_L}{\sqrt{3}}$	$\frac{I_L}{K}$	KV_L	$\frac{I_L}{K}$
Delta-Delta	V_L	V_L	$\frac{I_L}{\sqrt{3}}$	KV_L	$\frac{I_L}{K\sqrt{3}}$	KV_L	$\frac{I_L}{\sqrt{3}}$
Star-Delta	V_L	$\frac{V_L}{\sqrt{3}}$	I_L	$\frac{KV_L}{\sqrt{3}}$	$\frac{I_L}{K}$	$\frac{KV_L}{\sqrt{3}}$	$\frac{I_L}{\sqrt{3}}$
Delta-Star	V_L	V_L	$\frac{I_L}{\sqrt{3}}$	KV_L	$\frac{I_L}{K\sqrt{3}}$	$\sqrt{3}kv_L$	$\frac{I_L}{K\sqrt{3}}$

Labelling of Transformer:

The capital letters are used to label the terminals of each phase on H.V side. Generally A, B, and C are used for three phases. While small letters are used for labelling the terminals of each phase on LV side. Generally a, b and c are for three phases.
According to the polarities, the terminals are also labelled. Such terminal polarities are labelled using the suffix 1 and 2. The positive polarities on both are indicated by suffix 2 while the negative polarities on both sides are indicated by suffix 1. The labelling of terminals for phase B are shown in the Fig. Similarly the labelling for the terminals of other phases of three transformer is done.

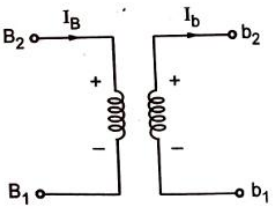

Labelling of transformer terminals

For three phase star-star connection the labelling of transformer as shown in the figure.

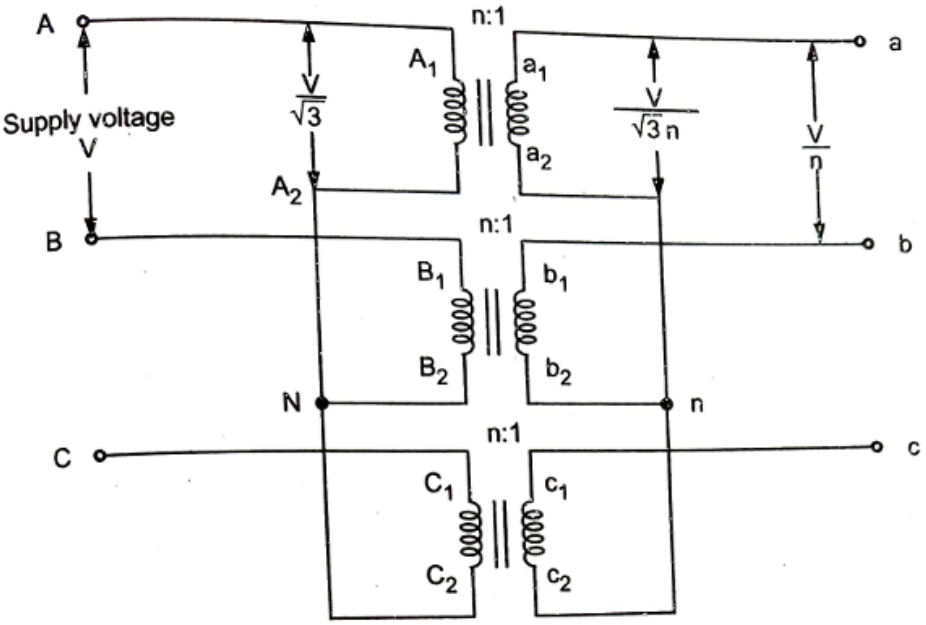

2b. Parallel Operation pf Transformer:

Necessity of parallel operation:

The need for parallel operation of transformers can be stated as,

1. When the load is higher than the ratings of the individual transformers parallel operation of smaller units share a high capacity load.
2. To make the power system more reliable, parallel operation is needed. If any one unit develops a fault, it can be removed and other units in parallel can maintain the supply.
3. According to the demand for power, the transformers in parallel can be switched ON or OFF. This the transformer losses and makes the overall system more efficient and economical.
4. When the number Of transformers are connected in parallel, then the cost of a standby unit is much less.

Parallel Operation of Transformers:

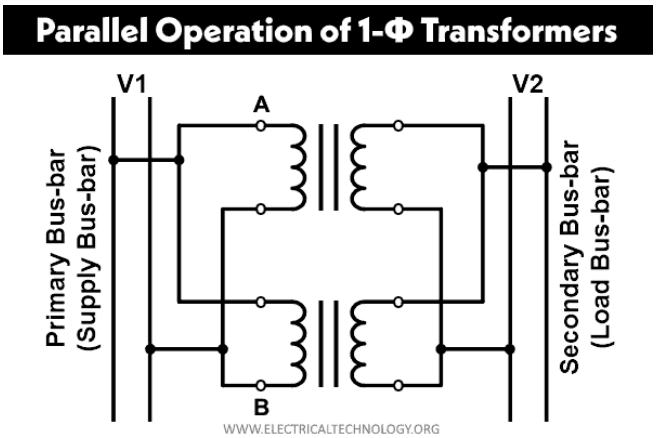

The transformers are connected in parallel when the load on them is more than the rating of the individual transformers. Several smaller units are operated in parallel which share a common load. Thus it is avoided that the total load is supplied by a single unit due to the use of parallel operation. The parallel operation is advantageous in the sense that the spare parts can be used interchangeably, and their storage is easy.

From Fig. primary windings are connected to supply bus bars while secondary windings are connected to load bus bars.

Advantages of using transformers in parallel:

1. **To maximize electrical power system efficiency:** Generally electrical power transformer gives the maximum efficiency at full load. If we run numbers of transformers in parallel, we can switch on only those transformers which will give the total demand by running nearer to its full load rating for that time. When load increases, we can switch none by one other transformer connected in parallel to fulfill the total demand. In this way we can run the system with maximum efficiency.
2. **To maximize electrical power system availability:** If numbers of transformers run in parallel, we can shut down any one of them for maintenance purpose. Other parallel transformers in system will serve the load without total interruption of power.
3. **To maximize power system reliability:** If any one of the transformers run in parallel, is tripped due to fault of other parallel transformers is the system will share the load, hence power supply may not be interrupted if the shared loads do not make other transformers over loaded.
4. **To maximize electrical power system flexibility:** There is always a chance of increasing or decreasing future demand of power system. If it is predicted that power demand will be increased in future, there must be a provision of connecting transformers in system in parallel to fulfill the extra demand because, it is not economical from business point of view to install a bigger rated single transformer by forecasting the increased future demand as it is unnecessary investment of money. Again if future demand is decreased, transformers running in parallel can be removed from system to balance the capital investment and its return.

Conditions for parallel operation:

Certain conditions have to be met before two or more transformers are connected in parallel and share a common load satisfactorily. They are,

1. The voltage ratio must be the same.
2. The per unit impedance of each machine on its own base must be the same.
3. The polarity must be the same, so that there is no circulating current between the transformers.
4. The phase sequence must be the same and no phase difference must exist between the voltages of the two transformers.

- **Same voltage ratio :** Generally the turns ratio and voltage ratio are taken to be the same. If the ratio is large there can be considerable error in the voltages even if the turns ratios are the same. When the primaries are connected to same bus bars, if the secondaries do not show the same voltage, paralleling them would result in a circulating current between the secondaries. Reflected circulating current will be there on the primary side also. Thus even without connecting a load considerable current can be drawn by the transformers and they produce copper losses. In two identical transformers with percentage impedance of 5 percent, a no-load voltage difference of one percent will result in a circulating current of 10 percent of full load current. This circulating current

gets added to the load current when the load is connected resulting in unequal sharing of the load. In such cases the combined full load of the two transformers can never be met without one transformer getting overloaded.

- **Per unit impedance:** Transformers of different ratings may be required to operate in parallel. If they have to share the total load in proportion to their ratings the larger machine has to draw more current. The voltage drop across each machine has to be the same by virtue of their connection at the input and the output ends. Thus the larger machines have smaller impedance and smaller machines must have larger ohmic impedance. Thus the impedances must be in the inverse ratios of the ratings. As the voltage drops must be the same the per unit impedance of each transformer on its own base, must be equal. In addition if active and reactive power are required to be shared in proportion to the ratings the impedance angles also must be the same. Thus we have the requirement that per unit resistance and per unit reactance of both the transformers must be the same for proper load sharing.
- **Polarity of connection:** The polarity of connection in the case of single phase transformers can be either same or opposite. Inside the loop formed by the two secondaries the resulting voltage must be zero. If wrong polarity is chosen the two voltages get added and short circuit results. In the case of polyphase banks it is possible to have permanent phase error between the phases with substantial circulating current. Such transformer banks must not be connected in parallel. The turns ratios in such groups can be adjusted to give very close voltage ratios but phase errors cannot be compensated. Phase error of 0.6 degree gives rise to one percent difference in voltage. Hence poly phase transformers belonging to the same vector group alone must be taken for paralleling.
- **Phase sequence:** The phase sequence of operation becomes relevant only in the case of poly phase systems. The poly phase banks belonging to same vector group can be connected in parallel. A transformer with +30° phase angle however can be paralleled with the one with - 30° phase angle, the phase sequence is reversed for one of them both at primary and secondary terminals. If the phase sequences are not the same then the two transformers cannot be connected in parallel even if they belong to same vector group. The phase sequence can be found out by the use of a phase sequence indicator.

Load sharing in case of similar transformers: (Equal Voltage Ratio)

The circuit diagram of two single-phase transformer A and B connected in parallel are shown below:

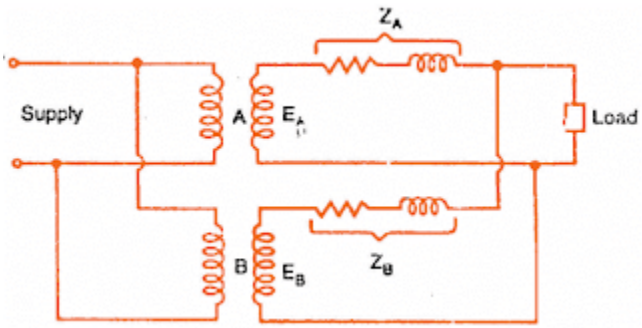

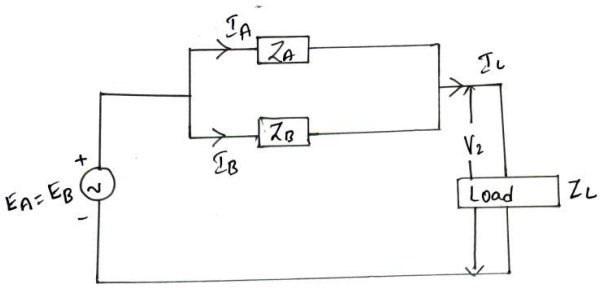

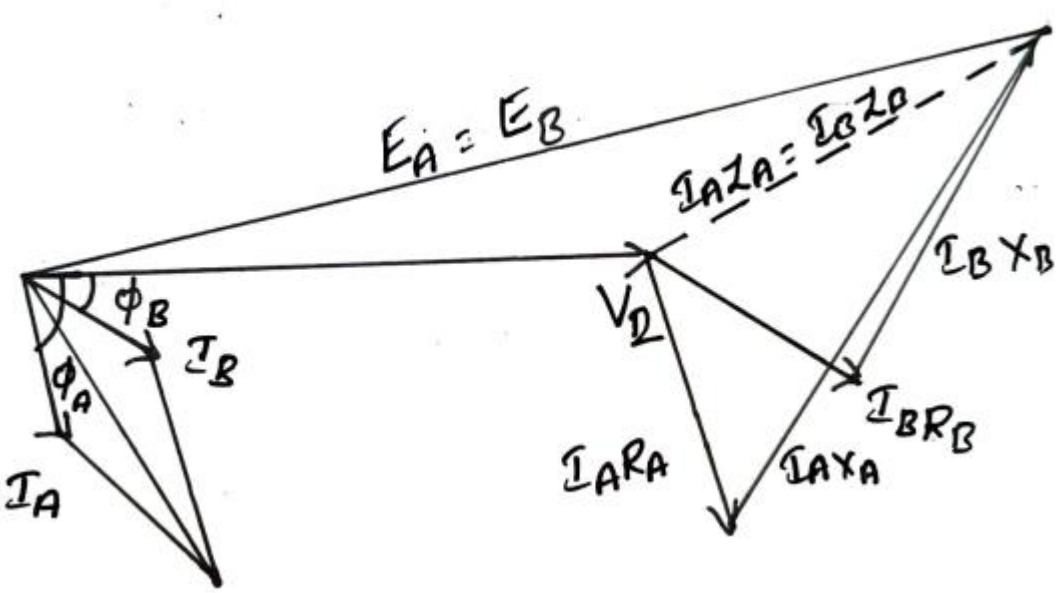

Let,
a_1 is the turn ratio of the transformer A
a_2 is the turn ratio of transformer B
Z_A is the equivalent impedance of the transformer A referred to secondary
Z_B is the equivalent impedance of the transformer B referred to secondary
Z_L is the load impedance across the secondary
I_A is the current supplied to the load by the secondary of the transformer A
I_B is the current supplied to the load by the secondary of the transformer B
V_L is the secondary load voltage
I_L is the load current

By Kirchhoff's Voltage Law,

$$E_A - Z_A I_A - V_2 = 0$$
$$E_B - Z_B I_B - V_2 = 0$$
$$E_A - Z_A I_A = V_2 \quad .....(1)$$
$$E_B - Z_B I_B = V_2 \quad .....(2)$$

Equating equation (1) and (2)

$$E_A - Z_A I_A = E_B - Z_B I_B$$

$$Z_A I_A = Z_B I_B$$

Voltage across Z_A and voltage across Z_B is same

$$\frac{I_A}{I_B} = \frac{z_A}{z_B}$$

Using current division rule

$$I_A = I \frac{Z_B}{Z_A + Z_B}$$

$$I_B = I\,\frac{Z_A}{Z_A + Z_B}$$

Multiply above equation with V_2

$$V_2 I_A = V_2 I_L \frac{Z_A}{Z_A + Z_B}$$

$$V_2 I_B = V_2 I_L \frac{Z_B}{Z_A + Z_B}$$

Load Shared by Transformer A, $S_A = S\frac{Z_B}{Z_A + Z_B}$

Load Shared by Transformer B, $S_B = S\frac{Z_A}{Z_A + Z_B}$

Load sharing in case of dissimilar transformers: (Unequal Voltage Ratio)

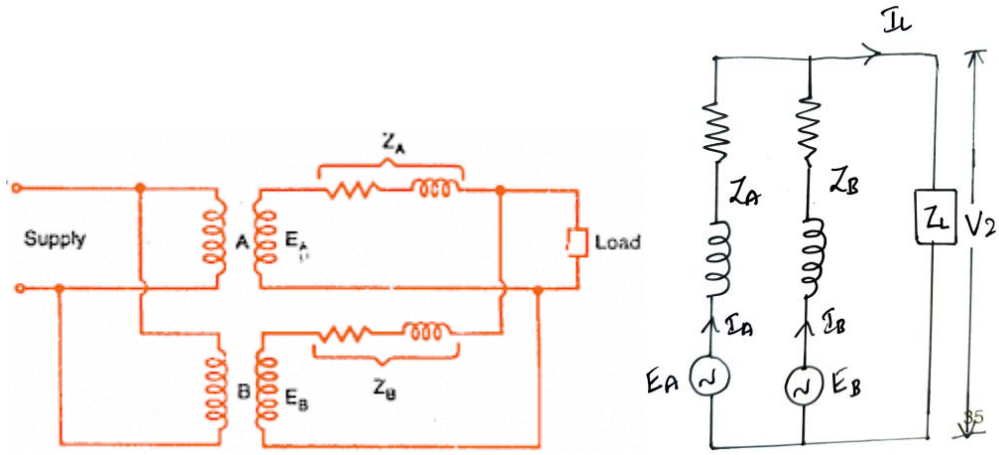

The voltage ratios of two transformers are not equal. Let us consider voltage ratio of transformer 1 is slightly more than 2. So that induced emf E_A is greater than E_B. Thus the resultant voltage will be E_1-E_2 which will cause a circulating current under no load condition.

$$I_C = \frac{E_A - E_B}{Z_A + Z_B}$$

Let Z_L = Load impedance of transformer
E_A = No load secondary voltage of transformer A
E_B = No load secondary voltage of transformer B
By applying KVL to the circuit

$$E_A = V_2 + I_A Z_A \;; E_B = V_2 + I_B Z_B \quad .....(1)$$

$$V_2 = I_L Z_L = (I_A + I_B) Z_L .....(2)$$

$$E_A = (I_A + I_B) Z_L + I_A Z_A \quad .....(3)$$

$$E_B = (I_A + I_B) Z_L + I_B Z_B \quad .....(4)$$

Subtract (4) from (3)

$$E_A - E_B = I_A Z_A - I_B Z_B$$

$$I_A = \frac{(E_A - E_B) + I_B Z_B}{Z_A} \quad .....(5)$$

Substitute equation (5) in (4)

$$E_B = I_B Z_B + I_B Z_L + \left(\frac{(E_A - E_B) + I_B Z_B}{Z_A}\right) Z_L$$

$$E_B = I_B Z_B + I_B Z_L + \frac{(E_A - E_B) Z_L}{Z_A} + \frac{I_B Z_B Z_L}{Z_A}$$

$$E_B - \frac{(E_A - E_B) Z_L}{Z_A} = I_B Z_B + I_B Z_L + \frac{I_B Z_B Z_L}{Z_A}$$

$$\frac{E_B Z_A - (E_A - E_B) Z_L}{Z_A} = I_B \left(\frac{Z_A Z_B + Z_A Z_L + Z_B Z_L}{Z_A}\right)$$

$$I_B = \frac{E_B Z_A - (E_A - E_B) Z_L}{Z_A Z_B + Z_A Z_L + Z_B Z_L} = \frac{E_B Z_A - (E_A - E_B) Z_L}{Z_A Z_B + Z_L (Z_A + Z_B)}$$

$$I_B = \frac{E_B Z_A - (E_A - E_B) Z_L}{Z_A Z_B + Z_L (Z_A + Z_B)}$$

$$I_A = \frac{E_A Z_B - (E_A - E_B) Z_L}{Z_A Z_B + Z_L (Z_A + Z_B)}$$

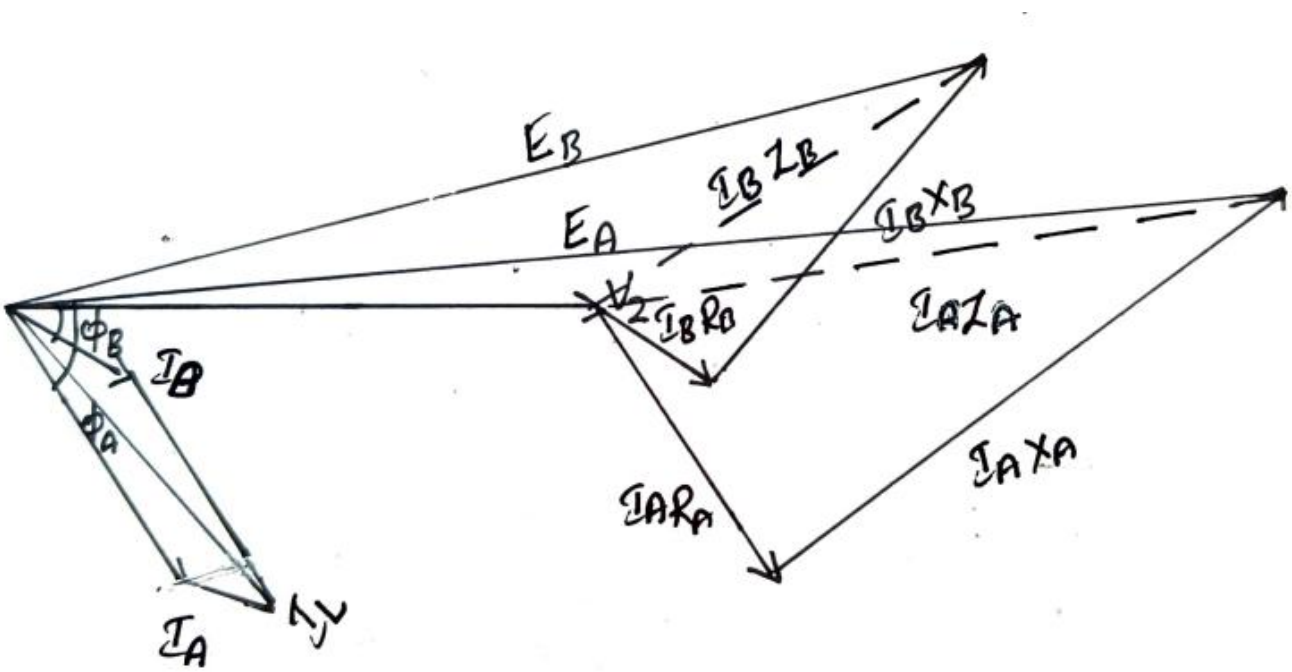

2c. Autotransformers and Tap-changing transformers:

Autotransformer:

It is possible to use only one winding for the transformer that part of the winding is common to the primary and secondary. A special type of transformer having only one winding such that part of the winding is common to the primary and secondary is called an autotransformer. Obviously, the two windings are

electrically connected and it works on the principle of conduction as well as induction. Such an autotransformer is very much economical where the voltage ratio is less than 2 and the electrical isolation of the two windings is not necessary.

Construction of Autotransformers:

In an autotransformer, only one winding is wound on a laminated magnetic core. The single winding of the autotransformer is used as primary and secondary. The voltage can be stepped down or stepped up using an autotransformer.

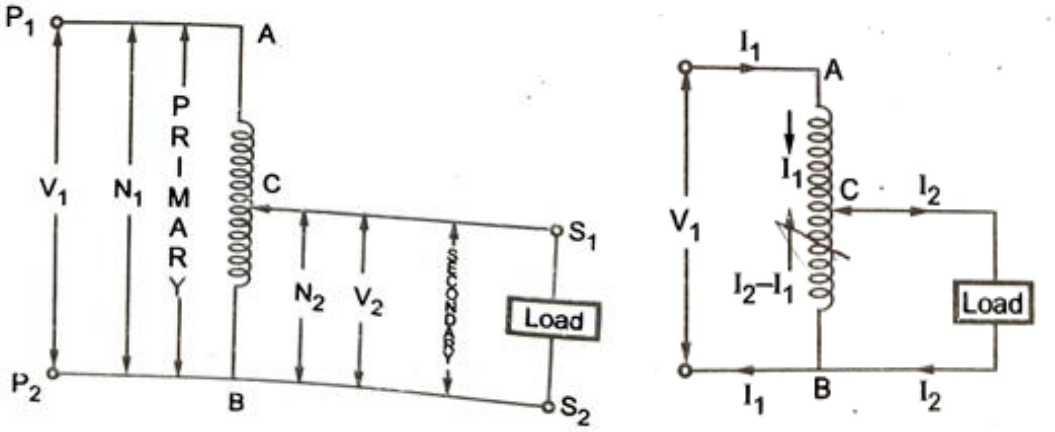

Step-down autotransformer

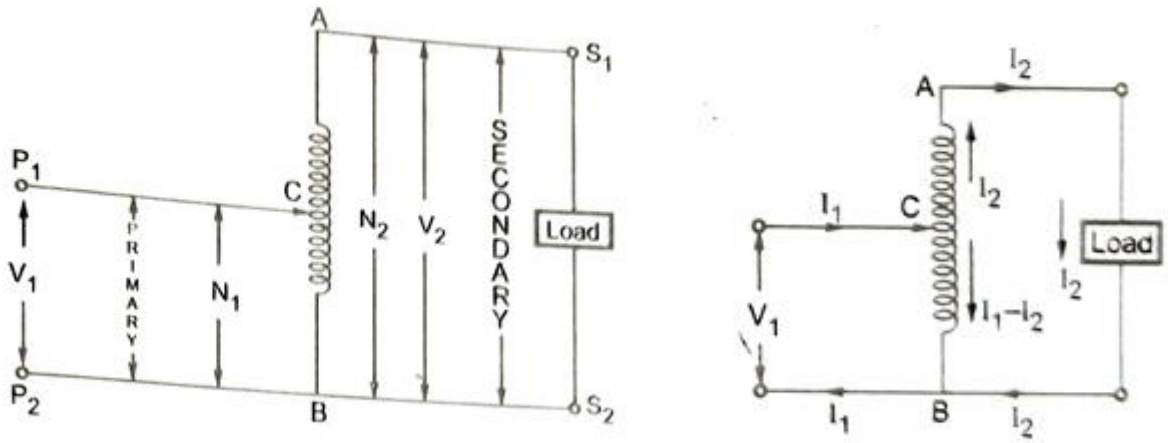

Step-up autotransformer

In step-down autotransformer the entire winding acts as a primary while the part of the winding is common to both primary and secondary. Thus AB forms the primary having N_1 turns while BC forms the secondary with. N_2 turns. As $N_2<N_1$, the output voltage $V_2 < V_1$ and it acts as a step-down autotransformer. In step up autotransformer, the entire winding acts as secondary while the part of the winding is used common to both primary and secondary. Thus AB forms the secondary having N_2 turns while BC forms the primary with N_1 turns. As $N_1<N_2$, the output voltage $V_1 < V_2$ and it acts as a step-up autotransformer.

Saving of Copper in Auto Transformer as Compared to Ordinary Two-Winding Transformer:

For any winding, the cross-section of the winding is proportional to the current I. The total length of the winding is proportional to the number of turns N. Hence the weight of copper is proportional to the product of N and I.

Weight of copper $\propto$ NI

Where I = Current in the winding

N = Number of turns of the winding

Consider a two-winding transformer and step-down autotransformer

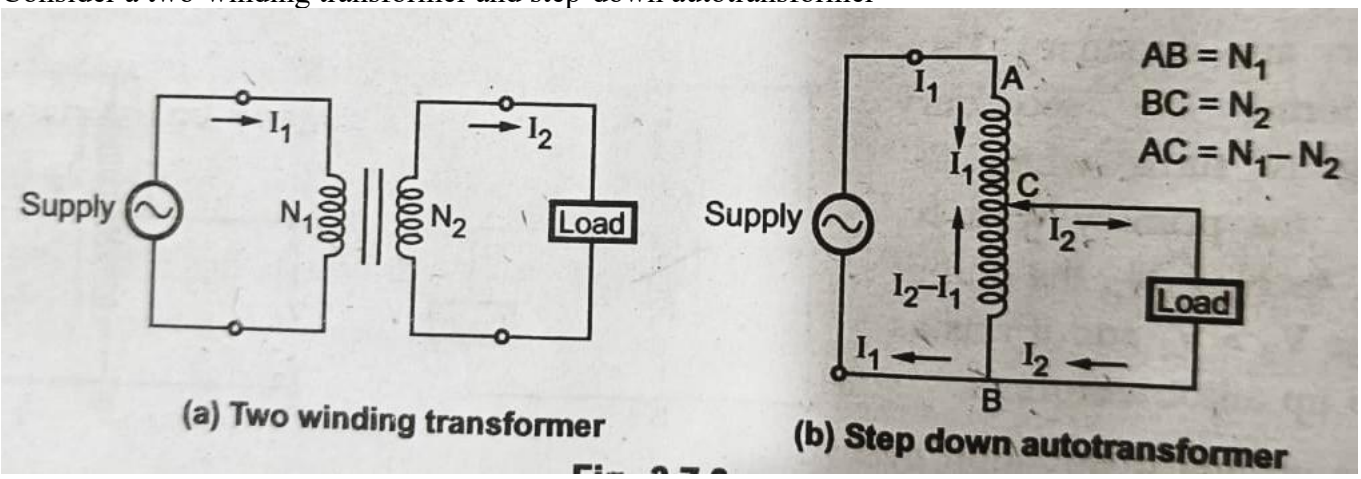

Let W_{TW} = Total weight of copper in two winding transformers.

W_{AT} = Weight of copper in autotransformer

In two winding transformer,

Weight of copper of primary $\propto N_1 I_1$

Weight of copper of secondary $\propto N_2 I_2$

$W_{TW} \propto N_1I_1 + N_2I_2$ ……Total weight of copper

In case of step down autotransformer.

Weight of copper of section AC $\propto (N_1 - N_2)$

Weight of copper of section BC $\propto N_2 (I_2 - I_1)$

$W_{AT} \propto (N_1 - N_2) I_1 + N_2 (I_2 - I_1)$

Taking ratio of the weights,

$$\frac{W_{TW}}{W_{AT}} = \frac{N_1I_1 + N_2I_2}{(N_1 - N_2)I_1 + N_2(I_2 - I_1)} = \frac{N_1I_1 + N_2I_2}{N_1I_1 - N_2I_1 + N_2I_2 - N_2I_1}$$

$$= \frac{N_1I_1 + N_2I_2}{N_1I_1 + N_2I_2 - 2N_2I_1}$$

But $K = \frac{N_2}{N_1} = \frac{I_1}{I_2}$

$$\frac{W_{TW}}{W_{AT}} = \frac{N_1I_1 + KN_1(I_1/K)}{N_1I_1 + KN_1(I_1/K) - 2(KN_1)I_1} = \frac{2N_1I_1}{2N_1I_1 - 2KN_1I_1}$$

$$\frac{W_{TW}}{W_{AT}} = \frac{1}{1-K}$$

$$W_{AT} = (1-K)\, W_{TW}$$

Saving of copper = $W_{TW} - W_{AT} = W_{TW} - (1-K)W_{TW}$

Saving of copper = $K\, W_{TW}$ …… For step down autotransformer

Thus saving in copper is K times the total weight of copper in two winding transformer.

Saving of copper = $\frac{1}{K} W_T$ …… For step up autotransformer

Advantages of Auto transformer:

- Copper required is very less.
- The efficiency is higher compared to two winding transformer.
- The size and hence cost is less compared to two winding transformer.
- The resistance and leakage reactance is less compared to two winding transformer
- The copper losses I^2R, are less.
- Due to less resistance and leakage reactance, the voltage regulation is superior than the two winding transformer.
- VA rating is more compared to two winding version.
- A smooth and continuous variation of voltage is possible.

Disadvantages of Auto transformer:

- Low impedance hence high short circuit currents for short circuits on secondary side.
- If a section of winding common to primary and secondary is opened, full primary voltage appears across the secondary resulting in higher voltages on secondary and danger of accidents.
- No electrical separation between primary and secondary which is risky in case of high voltage levels.
- Economical only where the voltage ratio is less than 2.

Applications of Auto transformer:

- It is used as a starter to give up to 50 to 60% of full voltage to the stator of a squirrel cage induction motor during starting.
- It is used to give a small boost to a distribution cable, to correct the voltage drop.
- It is also used as a voltage regulator
- Used in power transmission and distribution system and also in the audio system and railways.

Equivalent circuit of Auto transformer:

Consider an autotransformer as shown in the fig

R_1 and X_1 are the resistance and inductance of that part of the winding which carries only current I_1.

R_2 and X_2 are the resistance and inductance of that part of the winding which behaves as secondary.

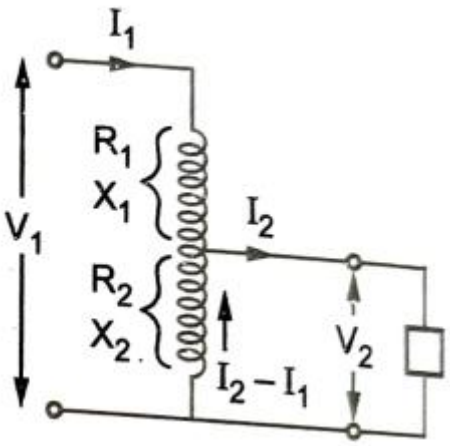

Applying Kirchhoff's law,

$V_1 = E_1 + I_1(R_1 + jX_1) - (I_2 - I_1)(R_2 + jX2)$ ……..(1)

$E_2 = V_2 + (I_2 - I_1)(R_2 + jX_2)$ ……..(2)

$K = \frac{V_2}{V_1} = \frac{E_2}{E_1} = \frac{I_2}{I_1}$ = Transformation ratio

$E_1 = \frac{E_2}{K}$, $I_2 = \frac{I_1}{K}$ and using in eqn(1)

$V_1 = \frac{E_2}{K} + I_1(R_1 + jX_1) + I_1(R_2 + jX_2) - \frac{I_1}{K}(R_2 + jX_2)$ ……..(3)

Using equation (2) and (3)

$$V_1 = \frac{V_2+(I_2-I_1)(R_2+jX_2)}{K} + I_1(R_1+jX_1) + I_1(R_2+jX_2) - \frac{I_1}{K}(R_2+jX_2)$$

$$I_2 = \frac{I_1}{K} \text{ and combining the term of } I_1 \text{ we get}$$

$$V_1 = \frac{V_2}{K} + I_1\left\{R_1 + R_2\left(\frac{1}{K^2} - \frac{2}{K} + 1\right) + j\left[X_1 + X_2\left(\frac{1}{K^2} - \frac{2}{K} + 1\right)\right]\right\}$$

$$V_1 = \frac{V_2}{K} + I_1\left\{R_1 + R_2\left(\frac{1}{K} - 1\right)^2 + j\left[X_1 + X_2\left(\frac{1}{K} - 1\right)^2\right]\right\}$$

$$V_1 = V_2' + I_1R_{1e} + I_1X_{1e} \qquad \text{.....(4)}$$

Equation (4) gives equivalent circuit as shown below

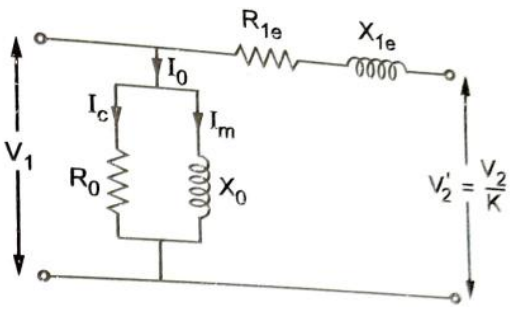

$$R_{1e} = R_1 + R_2\left(\frac{1}{K} - 1\right)^2$$

R_{1e}= Equivalent resistance referred to primary.

Tap-changing Transformers: The change of voltage is affected by changing the numbers of turns of the transformer provided with taps. For sufficiently close control of voltage, taps are usually provided on the high voltage windings of the transformer.

There are two types of tap-changing transformers

1. Off-load tap changing transformer

2. On-load tap changing transformer

Off-load tap-changing transformer: In this method, the transformer is disconnected from the main supply when the tap setting is to be changed. The tap setting is usually done manually. The off load tap changing transformer is shown in the figure below

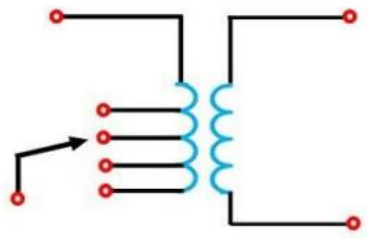

Off-load tap-changing transformer

On-load tap-changing transformer:

In order that the supply may not be interrupted, on-load tap changing transformer are sued. Such a transformer is known as a tap-changing under load transformer. While tapping, two essential conditions are to be fulfilled.

- The load circuit should not be broken to avoid arcing and prevent the damage of contacts.
- No parts of the windings should be short–circuited while adjusting the tap.

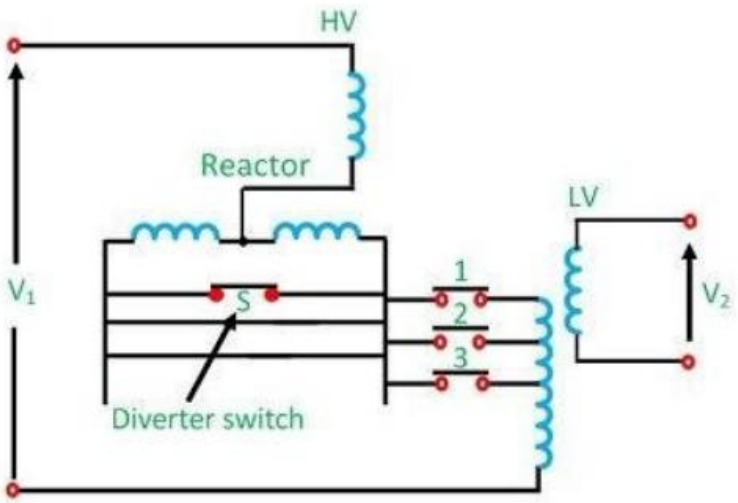

On-load tap changing using a reactor

The tap changing employing a center tapped reactor R show in the figure above. Here S is the diverter switch, and 1, 2, 3 are selector switch. The transformer is in operation with switches 1 and S closed. To change to tap 2, switch S is opened, and 2 is closed. Switch 1 is then opened, and S closed to complete the tap change. It is to be noted that the diverter switch operates on load, and no current flows in the selector switches during tap changing. During the tap change only half of the reactance which limits the current is connected in the circuit