MODULE -2 Generation of High Voltages and Currents

Syllabus

2.1 Generation of High Direct Current Voltages

2.2 Generation of High Alternating Voltages

2.3 Generation of Impulse Voltages

2.4 Tripping and Control of Impulse Generators.

2.5 Generation of Impulse Currents

Course Objectives

To discuss generation of high voltages and currents and their measurement

2. Introduction

Need for HV Generation

- Importance of High voltage DC & AC: High voltage dc require for industry, medical sciences, HVDC transmission etc.
- Applications of high voltage DC: Electrostatic precipitator (EPS) in thermal power plant for the ash handling unit, electrostatic paint, cement industry etc.
- Applications of high voltage AC: Power transmission.

2.1 Generation of High voltage DC

1. Rectifier circuits

2. Van de Graff generators

3. Cock croft- Walton type high voltage DC set

1. Rectifier circuits for producing high DC voltages from AC sources.

(a) Half wave rectifiers.

(b) Full wave rectifiers.

(c) Voltage doubler type rectifiers.

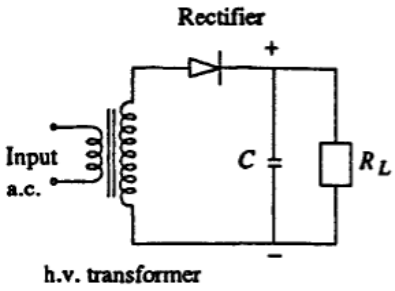

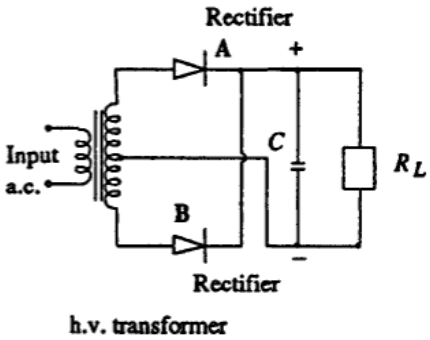

Half wave rectifier

Full wave rectifier

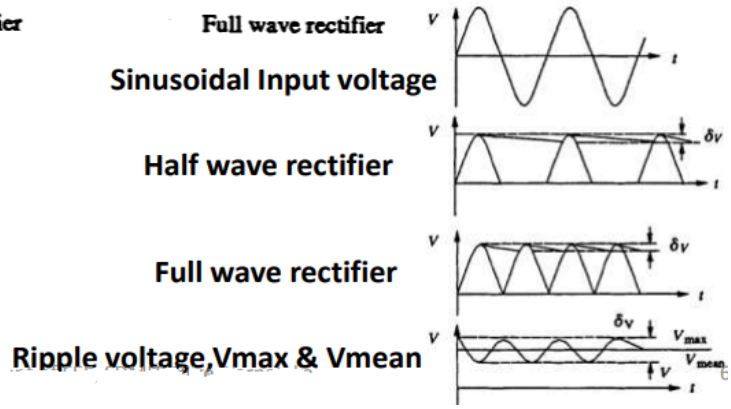

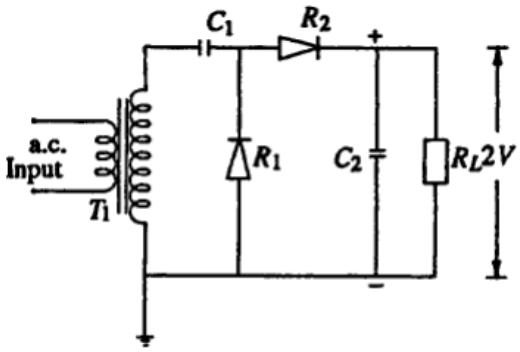

Simple voltage doubler

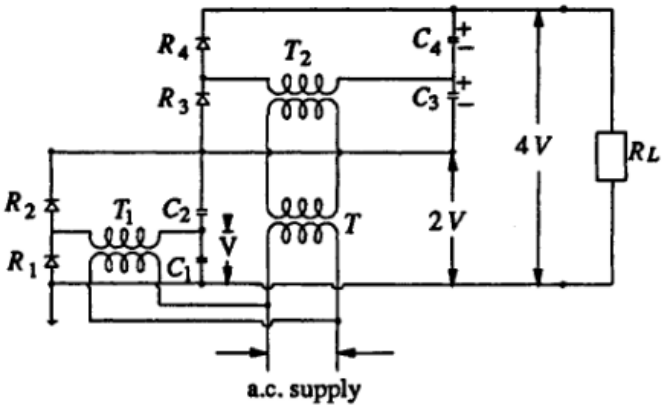

Cascaded voltage doubler

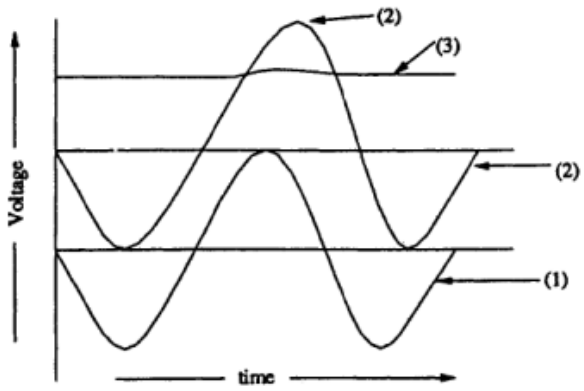

Waveforms of a.c. voltage and the d.c. output voltage on no-load of the voltage doubler shown in Fig

Fig2.1: 1. AC input voltage waveform 2.AC output voltage waveform without condenser filter

3.AC Output voltage waveform with condenser filter

2.1.1 Van de Graff generators

- It is a type of electrostatic generator
- It generates high potential differences
- Then the generated potential differences are used to speed up the particles like ions etc. So it is a "**particle accelerator**"
- **Application:** Nuclear physics experiments
- The potential difference achieved in modern Van de Graaff generators can reach 5 megavolts.

- A Van de Graaff generator operates by transferring electric charge from a moving belt to a terminal.
- The high voltages generated by the Van de Graaff generator can be used for accelerating subatomic particles to high speeds, making the Van de graaff generator a useful tool for fundamental Nuclear physics research.

Working of the generator is based on two principles:

1. Discharging action of sharp points, ie., electric discharge takes place in air or gases readily, at pointed conductors.
2. If the charged conductor is brought in to internal contact with a hollow conductor, all of its charge transfers to the surface of the hollow conductor no matter how high the potential of the latter may be.

Applications

1. Accelerating electrons to sterilize food and process materials,
2. Accelerating protons for nuclear physics experiments,
3. Driving X-ray tubes, etc.

Construction

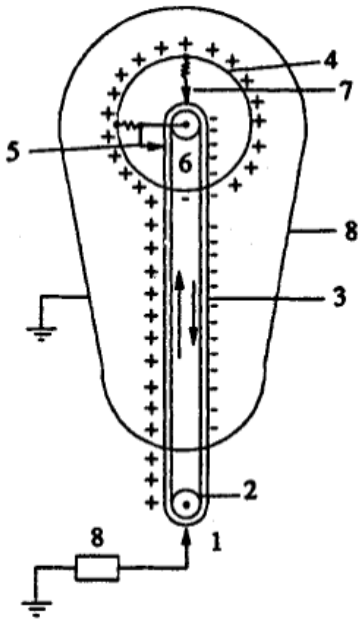

1. Lower spray point
2. Motor driven pulley
3. Insulated belt
4. High voltage terminal
5. Collector
6. Upper pulley insulated from terminal
7. Upper spray point
8. Earthed enclosure

1. A simple Van de Graaff-generator consists of a belt of silk, or a similar flexible dielectric material, running over two metal pulleys etc
2. The generator is usually enclosed in an earthed metallic cylindrical vessel and is operated under pressure or in vacuum.
3. Charge is sprayed on to an insulating moving belt from corona points
4. Require the potential of 10 to 100 kV
5. The belt is driven by an electric motor at a speed of 1000 to 2000 rpm
6. Potential of high voltage electrode rises in the rate of

$$\frac{dV}{dt} = \frac{I}{C}\frac{dQ}{dt} = \frac{I}{C}$$ where I is the net charging current.

7. The shape of electrodes are spherical
8. The charging of the belt is done by the lower spray points which are sharp needles and connected to a DC source of about 10 to 100 kV, so that the corona is maintained between the moving belt and the needles.
9. Belt has self charging system

2.1.2Cock croft Walton type high voltage DC set.

1. Cascaded voltage multiplier circuits (Voltage Doubler circuit) for higher voltages are cumbersome(difficult) and require too many supply and isolating transformers.
2. It is possible to generate very high DC voltages from single supply transformers by extending the simple voltage doubler circuits.
3. This is simple and compact when the load current requirement is less than one milli ampere, such as for cathode ray tubes, etc.

4. Valve type pulse generators may be used instead of conventional AC supply.
5. The circuit becomes compact

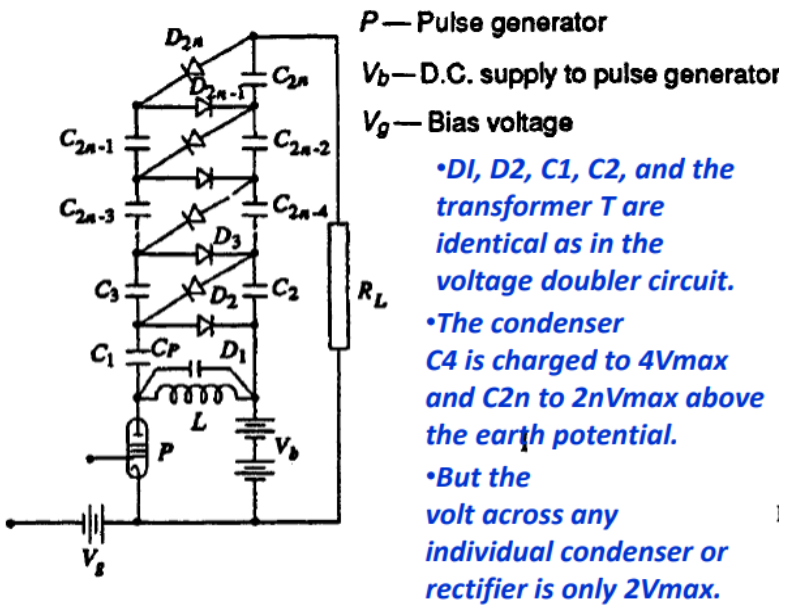

Cascaded rectifier unit with pulse generator

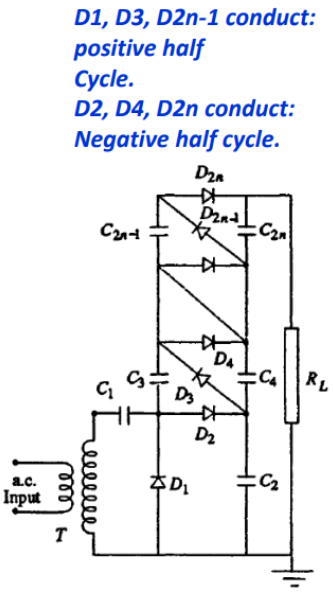

Fig 2.2 :Cockroft Walton voltage multiplier circuit

1. A DC power supply of about 500V applied to the pulse generator, is sufficient to generate a high voltage DC of 50 to 100 kV with suitable number of stages.
2. DI, D2, C1, C2, and the transformer T are identical as in the voltage doubler circuit.
3. The condenser C4 is charged to 4Vmax and C2n to 2nVmax above the earth potential.
4. But the volt across any individual condenser or rectifier is only 2Vmax.
5. D1, D3, D2n-1 conduct: Positive half Cycle. • D2, D4, D2n conduct: Negative half cycle.

1. Calculation of output voltage

- The pulses generated in the anode circuit of the valve P are rectified and the voltage is cascaded to give an output of across the load RL.

$$\text{Output} = 2nV_{max}$$

- A trigger voltage pulse of triangular waveform (ramp) is given to make the valve switched on and off.

Ripple content & Voltage drop in cock croft- Walton type dc set

2.Calculation of ripple voltage

$$\delta V = \text{ the ripple} = \frac{I_1}{fC_2}$$

I_1 = load current from the rectifier

f = supply frequency,

In general the expression for ripple voltage is given by $\frac{nI_1}{fC}$.

n stages the total ripple will be

$$\delta V_{total} = \frac{I_1}{fC}[1+2+3\ldots+n] = \frac{I_1}{fC}\frac{n(n+1)}{2}$$

3. Calculation of % ripple

$$\%\ \text{ripple} = \frac{\delta V \times 100}{2nV_{max}}$$

Where 2nVmax is the output voltage

4. Calculation of voltage regulation

$$\text{Voltage drop, } \Delta V = \frac{I}{fC}\left(\frac{2}{3}n^3 + \frac{n^2}{2} - \frac{n}{6}\right)$$

$$\text{Voltage regulation} = \left(\frac{\Delta V}{2nV_{max}}\right)$$

5. Optimum number of stages for minimum voltage drop

1. In addition to the ripple δV, there is a voltage drop Δv which is the difference between the theoretical no load and the on load voltage.

2. optimum number of stages for the minimum voltage drop may be expressed as

$$n_{optimum} = \sqrt{\frac{V_{max} fC}{I}}$$

where I is the load current.

Eg Thus, for a multiplier or a cascaded circuit with
f= 50 Hz, C = 0.1 *micro Farad, Vmax = 100 kV* and I=5 mA, the number of stages = *10.*

Current and voltage waveforms of cock croft- Walton type high voltage DC Set

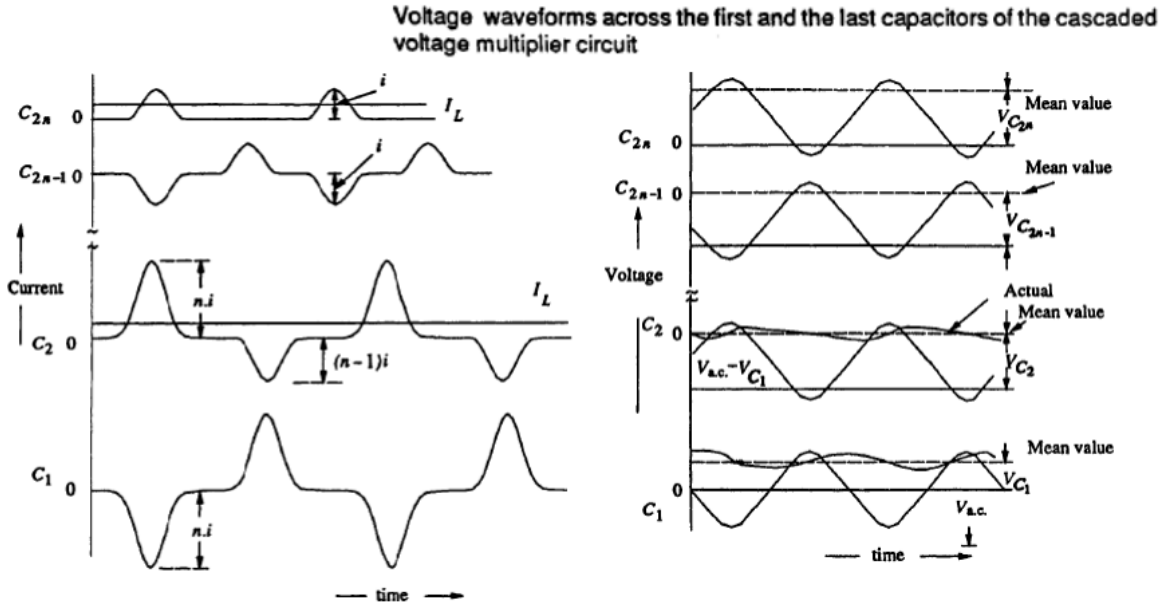

Schematic current waveforms across the first and the last capacitors of the cascaded voltage multiplier circuit

Ripple content & Voltage drop in cock croft- Walton type dc set

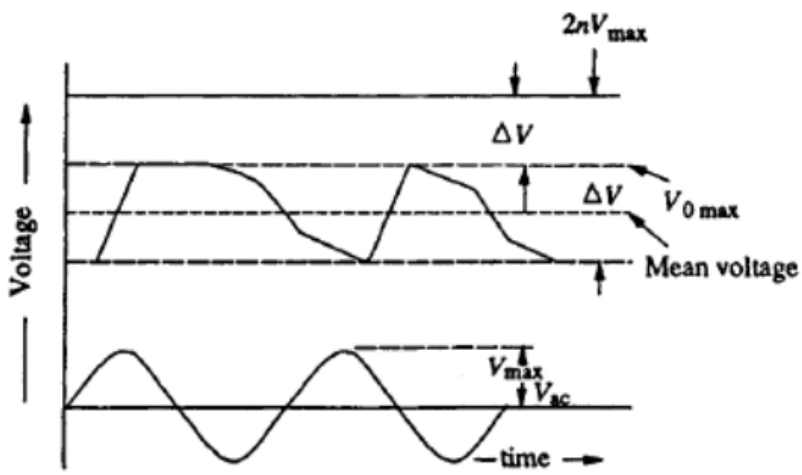

Ripple voltage δV and the voltage drop ΔV in a cascaded voltage multiplier circuit

2.1.3.Numerical on Cockroft Walton type high voltage DC set

A Cockcroft-Walton type voltage multiplier has eight stages with capacitances, all equal to 0.05 μF. The supply transformer secondary voltage is 125 kV at a frequency of 150 Hz. If the load current to be supplied is 5 mA, find (*a*) the percentage ripple, (*b*) the regulation, and (*c*) the optimum number of stages for minimum regulation or voltage drop.

Solution: (*a*) *Calculation of Percentage Ripple*

$$\text{The ripple voltage } \delta V = \frac{I}{fC}\frac{(n)(n+1)}{2}$$

$$I = 5 \text{ mA}, f = 150 \text{ Hz}, C = 0.05\ \mu\text{F}, \text{ and } n = 8,$$

$$\therefore \quad \delta V = \frac{5\times 10^{-3}}{150\times 0.05\times 10^{-6}}\times\frac{8\times 9}{2}$$

$$= 24 \text{ kV}$$

$$\%\text{ ripple} = \frac{\delta V\times 100}{2nV_{max}} = \frac{24\times 100}{2\times 125\times 8}$$

(*b*) *Calculation of Regulation*

$$\text{Voltage drop, } \Delta V = \frac{I}{fC}\left(\frac{2}{3}n^3 + \frac{n^2}{2} - \frac{n}{6}\right)$$

$$= \frac{5\times 10^{-3}}{150\times 0.05\times 10^{-6}}\left[\left(\frac{2}{3}\times 8^3\right)+\left(\frac{1}{2}\times 8^2\right)-\frac{8}{6}\right]$$

$$= 248 \text{ kV}$$

$$\therefore \quad \text{regulation}\left(\frac{V}{2nV_{max}}\right) = \frac{248}{2\times 8\times 125} = \frac{124}{1000}$$

$$= 12.4\%$$

(*c*) *Calculation of Optimum Number of Stages* ($n_{optimum}$)

Since $n > 5$,

$$n_{optimum} = \sqrt{V_{max} fC/I}$$

$$= \sqrt{\frac{125\times 150\times 0.05\times 10^{-6}\times 10^{+3}}{5\times 10^{-3}}}$$

$$= \sqrt{125\times 1.5}$$

$$= 13.69$$

$$= 14 \text{ stages}$$

2.2 Generation of HV AC Voltage

Need for Cascade transformer connection

1. When test voltage requirements are less than about 300 kV, a single transformer can be used for test purposes.
2. The impedance of the transformer should be generally less than 5%
3. Transformer must be capable of giving the short circuit current for one minute or more depending on the design.
4. Third winding known as meter winding is provided to measure the output voltage.
5. For higher voltage requirements, a single unit construction becomes difficult and costly due to insulation problems.
6. Transportation and arranging of large transformers become difficult.
7. These drawbacks are overcome by series connection or cascading of the several identical units of transformers, wherein the high voltage windings of all the units effectively come in series.

Schematic diagram of cascade transformer for HVAC generation

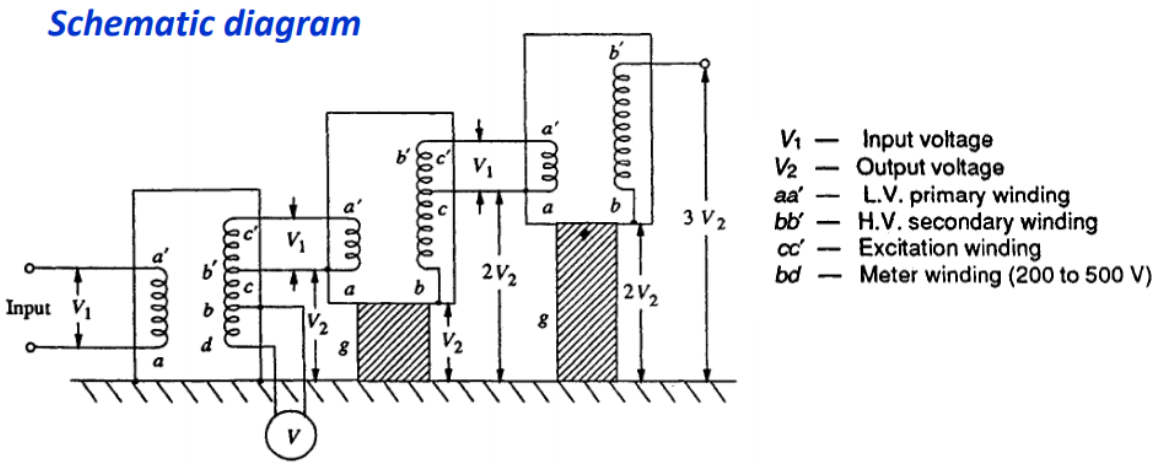

Cascade transformer connection (schematic)

1. The first transformer is at the ground potential along with its tank.
2. The second transformer is kept on insulators and maintained at a potential of V2, the output voltage of the first unit above the ground.
3. The high voltage winding of the first unit is connected to the tank of the second unit.
4. The low voltage winding of this unit is supplied from the excitation winding of the first transformer, which is in series with the high voltage winding of the first transformer at its high voltage end.
5. The rating of the excitation winding is almost identical to that of the primary or the low voltage winding

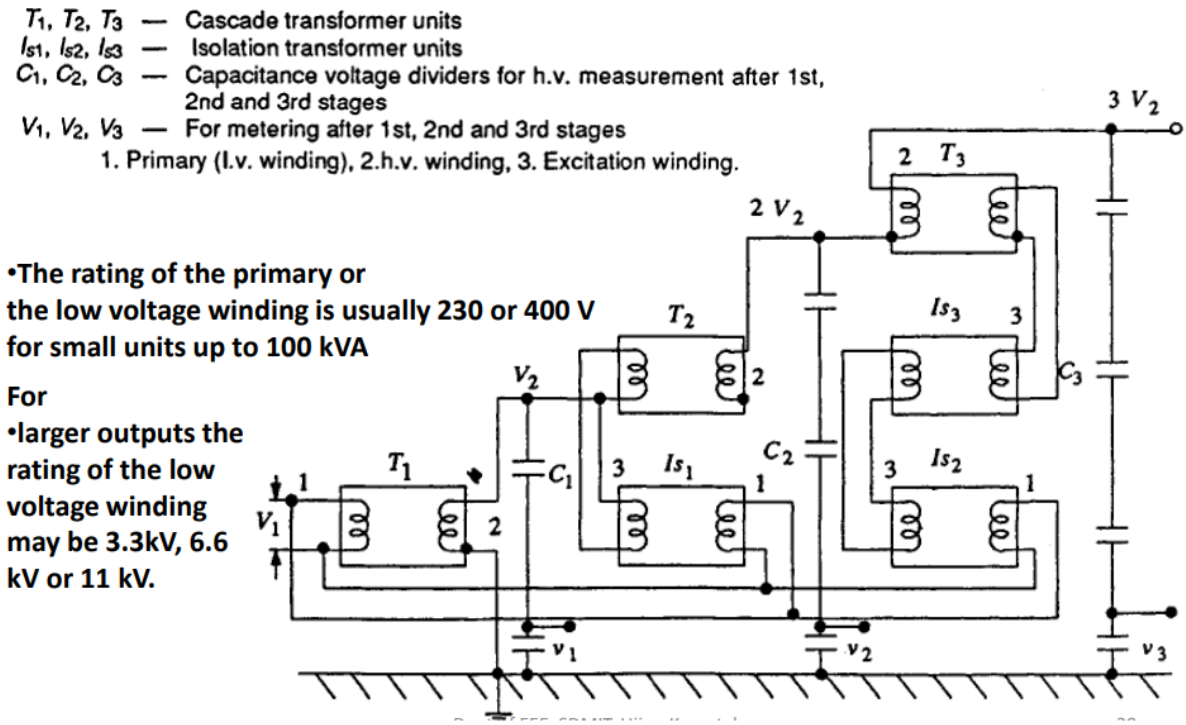

6. Supply to the units can be obtained from a motor-generator set or through an induction regulator for variation of the output voltage.
7. Isolating transformers IS1,IS2 and IS3 & are 1:1 ratio transformers
8. They are insulated to their respective tank potentials and are meant for supplying the excitation for the second and the third stages at their tank potentials
9. Power supply to the isolating transformers is also fed from the same AC input.

Advantages of cascade connection

1. Natural cooling is sufficient
2. Transformers are light and compact
3. Ease of transportation & assembly
4. Construction is similar to the isolating transformer & cascaded unit
5. Either star or delta connection are possible

Draw backs

1. More space requirement and expensive

2.2.1 Resonant Circuit

The resonance principle of a series tuned L-C circuit can be made use of to obtain a higher voltage with a given transformer.

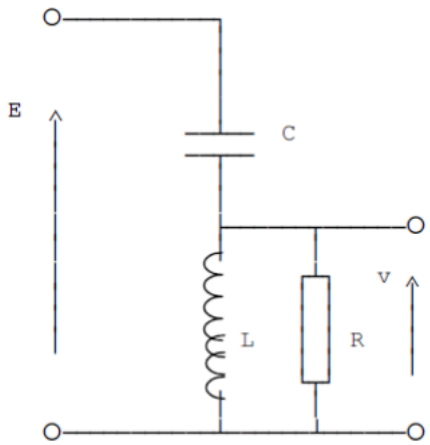

Resonance circuit

Basic principle of Resonant circuit

The resonance principle of a series tuned **L-C** circuit can be made use of to obtain a higher voltage with a given transformer.

Let **R** represent the equivalent parallel resistance across the coil and the device under test. The current **i** would be given by

$$i = \frac{E}{\frac{1}{j\omega C} + \frac{j\omega L R}{R + j\omega L}}$$

$$\text{so that} \quad v = i.\frac{j\omega L R}{R + j\omega L}$$

$$\text{i.e.} \quad v = \frac{-\omega^2 L C R.E}{R + j\omega L - \omega^2 L C R} = -\frac{E.R}{j\omega L} \quad \text{at resonance}$$

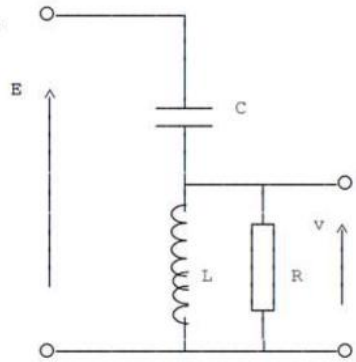

Resonance circuit

Since **R** is usually very large, the **Q** factor of the circuit ($Q = R/L\omega$) would be very large, and the output voltage would be given by

$$|v| = E.\frac{R}{L\omega} = E.Q$$

It can thus be seen that a much larger value that the input can be obtained across the device under test in the resonant principle.

$$\text{at resonance} \quad \omega = 2\pi f = \frac{1}{\sqrt{LC}}$$

2.2.2 Resonant Transformers

1. resonant transformer, an electrical component which consists of two high Q coils wound on the same core with capacitors connected across the windings to make two coupled LC circuits.
2. Resonant transformer is one of the best choice for high voltage generation which operates on resonance phenomenon (XL = Xc).
3. In resonance condition, the current through test object is very large and that is limited only by the resistance of the circuit.
4. The waveform of the voltage across the test object will be purely sinusoidal.

Applications of Resonant Transformer:

1. This principle is utilized in testing at very high voltages and on occasions requiring large current outputs such as cable testing , dielectric loss measurements, partial discharge measurements, etc.

Series Resonant Transformers

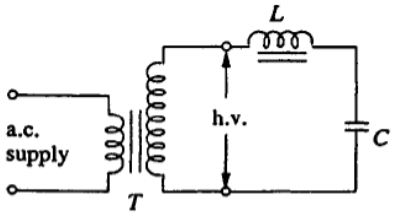

(a)

Fig. 6.12a Transformer

T — Testing transformer
L — Choke
C — Capacitance of h.v. terminal and test object
L_0 — Magnetizing inductance

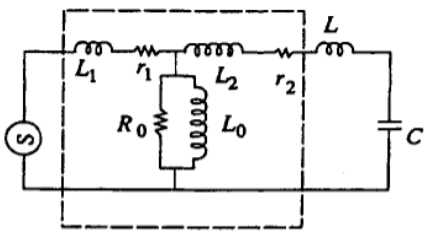

(b)

Fig. 6.12b Equivalent circuit

L_1, L_2 — Leakage inductances of the transformer
r_1, r_2 — Resistances of the windings
R_0 — Resistance due to core loss

1. The equivalent circuit of HV testing circuit consists of a)leakage reactance of the winding, b)winding resistance, c)magnetizing reactance, d)shunt capacitance across the output
2. It is possible to have a series resonance at power frequency w, if

$$\boxed{(L_1 + L_2) = 1/\omega C}$$

3. During the resonance condition current in the test object is very large and is limited only by the resistance of the circuit.
4. The magnitude of the voltage across the capacitance C of the test object will be

$$V_C = \left| \frac{-jVX_C}{R + j(X_L - X_C)} \right| = \frac{V}{R} X_C = \frac{V}{\omega CR}$$

5. Q factor of the circuit and gives the magnitude of the voltage multiplication across the test object under resonance conditions.
6. The input voltage required for excitation is reduced by a factor 1/2, and the output kVA required is also reduced by a factor 1/Q.
7. The secondary power factor of the circuit is unity.

Series Resonant transformer

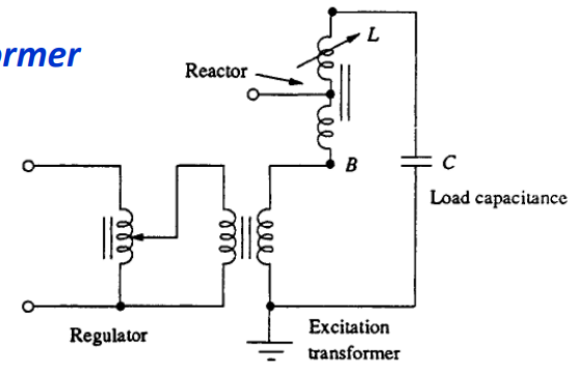

Series resonant a.c. test system

Ratings: Regulator : 10 – 100 kVA
Excitation transformer : 10 – 100 kVA with an output voltage of about 10 kV.
Reactor voltage – each unit up to 300 kV.

1. A voltage regulator of either the auto-transformer type or the induction regulator type is connected to the supply mains.
2. The secondary winding of the exciter transformer is connected across the H.V reactor, L, and the capacitive load C.
3. The inductance of the reactor L is varied by varying its air gap and operating range is set in the ratio 10 : 1.
4. Capacitance C comprises of the capacitance of the test object, capacitance of the measuring voltage divider, capacitance of the high voltage bushing etc.
5. The Q-factor obtained in these circuits will be typically of the order of 50.

Advantages of series resonant circuit

1. It gives an output of pure sine wave.
2. Power requirements are less (5 to 10% of total kVA required).
3. No high-power arcing and heavy current surges occur if the test object fails, as resonance ceases at the failure of the test object.
4. Cascading is also possible for very high voltages.
5. Simple and compact test arrangement.
6. No repeated flashovers occur in case of partial failures of the test object and insulation recovery

Disadvantages of series resonant circuit

1. Requirements of additional variable chokes capable of withstanding the full test voltage and the full current rating

2.2.3 Parallel Resonant Transformer

1. In the parallel resonant mode the high voltage reactor is connected as an auto-transformer and the circuit is connected as a parallel resonant circuit.
2. The advantage of the parallel resonant circuit is that more stable output voltage can be obtained along with a high rate of rise of test voltage.
3. Independent of the degree of tuning and the Q-factor.

4. Single unit resonant test systems are built for output voltages up to 500 kV, while cascaded units for outputs up to 3000 kV, 50/60 Hz are available.

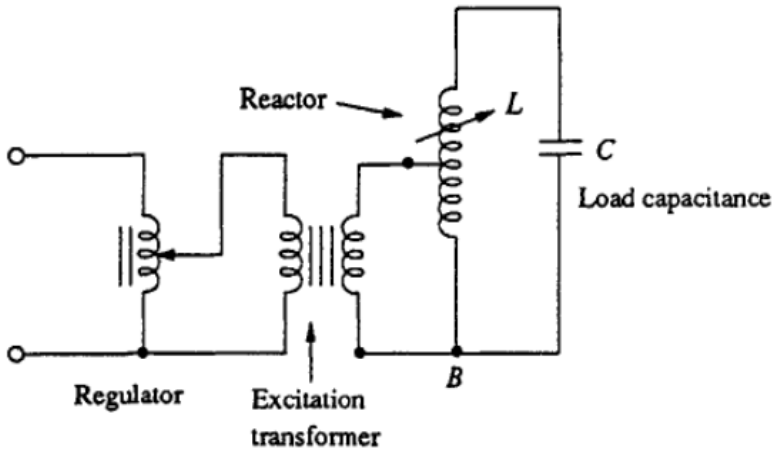

Parallel resonant a.c. test system

Numerical on Parallel Resonant circuit

Example : A 100 kVA, 400 V/250 kV testing transformer has 8% leakage reactance and 2% resistance on 100 kVA base. A cable has to be tested at 500 kV using the above transformer as a resonant transformer at 50 Hz. If the charging current of the cable at 500 kV is 0.4 A, find the series inductance required. Assume 2% resistance for the inductor to be used and the connecting leads. Neglect dielectric loss of the cable. What will be the input voltage to the transformer ?

Solution

The maximum current that can be supplied by the testing transformer is

$$\frac{100 \times 10^3}{250 \times 10^3} 0.4 \text{ A}$$

$X_C =$ Reactance of the cable is

$$\frac{V_C}{I} = \frac{500 \times 10^3}{0.4} = 1250 \text{ k}\Omega$$

$X_L =$ Leakage reactance of the transformer is

$$\frac{\%X}{100} \times \frac{V}{I} = \frac{8}{100} \times \frac{250 \times 10^3}{0.4} = 50 \text{ k}\Omega$$

At resonance, $X_C = X_L$.
Hence, additional reactance needed

$$= 1250 - 50 = 1200 \text{ k}\Omega$$

Inductance of additional reactance (at 50 Hz frequency)

$$\frac{1200 \times 10^3}{2\pi \times 50} = 3820 \text{ H}$$

R = Total resistance in the circuit on 100 kVA base is 2% + 2% = 4%.
Hence, the ohmic value of the resistance

$$= \frac{4}{100} \times \frac{250 \times 10^3}{0.4} = 25 \text{ k}\Omega$$

Therefore, the excitation voltage E_2 on the secondary of the transformer

$$= I \times R$$
$$= 0.4 \times 25 \times 10^3$$
$$= 10 \times 10^3 \text{ V or } 10 \text{ kV}$$

The primary voltage or the supply voltage, E_1

$$= \frac{10 \times 10^3 \times 400}{250 \times 10^3}$$
$$= 16 \text{ V}$$

$$\text{Input kW} = \frac{16}{400} \times 100 = 4.0 \text{ kW}$$

2.2.4 Tesla coil

1. Tesla coil is an electrical resonant transformer circuit designed by inventor Nikola Tesla.
2. It is Used to generate or produce high voltage, low current & high frequency AC electricity.
3. High frequency transformer is required.
4. The commonly used high frequency resonant transformer is the Tesla coil.
5. Tesla coil is a doubly tuned resonant circuit.
6. The primary voltage rating is 10 kV and the secondary may be rated to as high as 500 to 1000 kV.
7. Output frequency range: 50kHz to 1 MHz.
8. Damped oscillations can be obtained by using Tesla Coil.

Applications:

1. X-ray generation, experiment in electrical Lighting etc

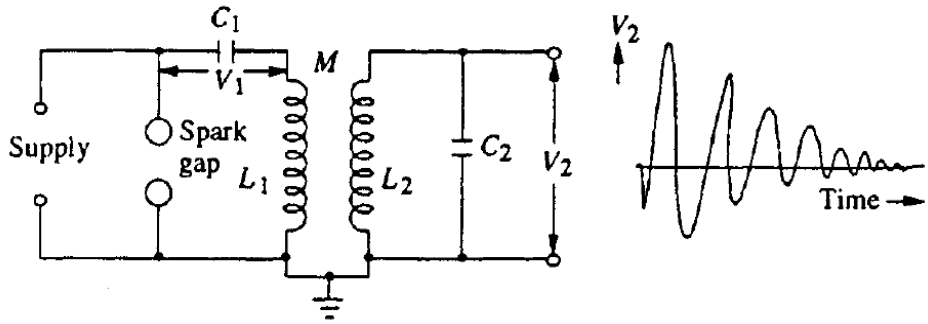

(a) Equivalent circuit (b) Output waveform

1. The primary is fed from an AC supply through the condenser C1.
2. A spark gap G connected across the primary is triggered at the desired voltage V, which induces high self excitation in the secondary.
3. Spark gap G act as a switch of the circuit.
4. The primary and the secondary windings (L1 and L2) are wound on an insulated former with no core (air-cored) and are immersed in oil. The windings are tuned to a frequency of 10 to 100 kHz by means of the condensers C1 and C2.
5. The output voltage V is a function of the parameters LI, L2, C1, C2 and the mutual inductance M.
6. Usually, the winding resistances will be small and contribute only for damping of the oscillations.

$$V_2 = \frac{MV_1}{\sigma L_1 L_2 C_1} \frac{1}{\gamma_2^2 - \gamma_1^2} [\cos \gamma_1 t - \cos \gamma_2 t]$$ Output Voltage

$$V_2 = \frac{MV_1}{\sigma L_1 L_2 C_1} \frac{1}{\gamma_2^2 - \gamma_1^2} [\cos \gamma_1 t - \cos \gamma_2 t]$$ Output Voltage

Where

$$\sigma^2 = 1 - \frac{M^2}{L_1 L_2} = 1 - K^2$$ K = coefficient of coupling between the windings L1 and L2

$$\gamma_{1,2} = \frac{\omega_1^2 + \omega_2^2}{2} \pm \sqrt{\left(\frac{\omega_1^2 + \omega_2^2}{2}\right)^2 - \omega_1^2 \omega_2^2 (1 - K^2)}$$

$$\omega_1 = \frac{1}{\sqrt{L_1 C_1}} \text{ and } \omega_2 = \frac{1}{\sqrt{L_2 C_2}}$$

The *peak amplitude* of the secondary voltage V2 can be expressed as

$$V_{2max} = V_1 e \sqrt{\frac{L_2}{L_1}}$$

Where ,

$$e = \frac{2\sqrt{(1-\sigma)}}{\sqrt{(1+a)^2 - 4\sigma a}}$$

$$a = \frac{L_2 C_2}{L_1 c_1} = \frac{W_1^2}{W_2^2}$$

1. A more simplified analysis for the Tesla coil may be presented by considering that the energy stored in the primary circuit in the capacitance C1 is transferred to C2 via the magnetic coupling.
2. If W1 is the energy stored in C1 and W2 is the energy transferred to C2 and if the efficiency of the transformer is η, then

$$W_1 = \frac{1}{2}\eta C_1 V_1^2 = (\tfrac{1}{2} C_2 V_2^2)$$

$$V_2 = V_1 \sqrt{\eta \frac{C_1}{C_2}}$$

Advantages of Tesla coil

1. The absence of iron core in transformers and hence saving in cost and size.
2. pure sine wave output (Less wave form distortion).
3. Slow build-up of voltage over a few cycles and hence no damage due to switching surges
4. Uniform distribution of voltage across the winding coils due to subdivision of coil stack into a number of units.

2.3 Generation of Impulse Voltages

What is Impulse Voltage

"Impulse voltage is a unidirectional voltage with no appreciable oscillation. It rises rapidly to a maximum value and falls more or less rapidly to zero."

A unidirectional voltage that rapidly rises to a peak value and then drops to zero more or less rapidly. Also known as ***pulse voltage.***

Why Impulse Voltage?

To *study the effect of transient over voltages* generated by lightning or switching operations on the system.

Representation of Impulse Wave

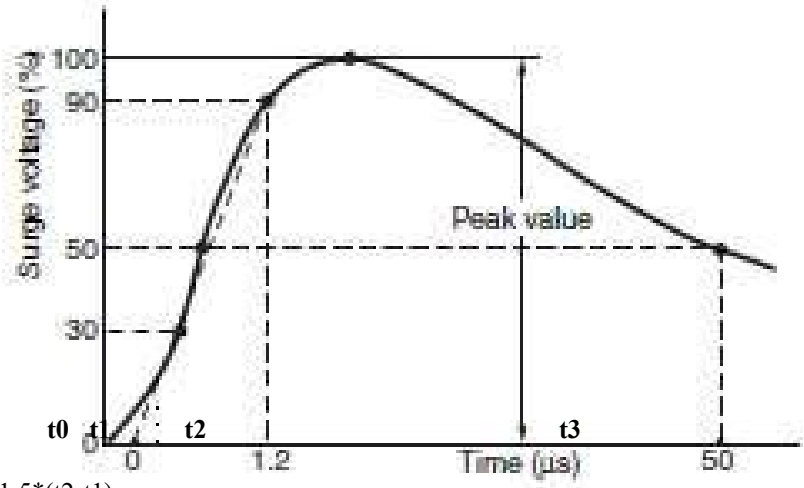

Wave front = 1.5*(t2-t1)

Wave tail = t3-t0

t2 is the time taken to reach 90% of peak value

t1 is the time taken to reach 10% of peak value

a) Impulse Voltage

1. Maximum value is called *peak value* of impulse voltage.
2. If an impulse voltage develops without causing flashover or puncture is called ***full impulse voltage.***
3. Due to flash over or puncture sudden collapse of impulse voltage will occur and it is called as ***chopped impulse voltage.***

b) Wave front & Wave tail

A full impulse voltage consists of both *wave front* and *wave tail*.

1. ***Wave front***- Time taken by the wave to reach its maximum value starting from zero value.
   - ***Since it is*** difficult to identify the *wave front* ,Wave front is considered as *1.5 times (t2-t1)*
   - Where *t2* is the *time taken to reach 90% of peak value*
   - *t1* is the *time taken to reach 10% of peak value*
   - *(t2-t1)* is about 80% of wave front time

2. ***Wave tail***- Time measured between the *nominal starting point t0* and the point on the wave tail where the voltage is 50% of peak value.
   - wave tail time (t3-t0)
   - Part of a signal-wave envelope (in time or distance) between the steady-state value (or crest) and the end of the envelope.

c) Standards for impulse voltage

Three standards

1. **BSS & ISS standard**
2. **American Standard Association**
3. **IEC standard**
1. ***BSS and ISS standard***

- *Standard wave shape* specified *(1/50) microseconds* wave.

  i.e a *wave front of 1 micro second* and *wave tail of 50 micro seconds.*

- Tolerance is not more than +50% or -50% on the duration of the wave front.
- 20% on the time to half value on the wave tail is allowed.
- *Complete specification* of the wave is *100kV, (1/50) microseconds* , where *100kV* is the *peak value of the wave*

2. *American Standard Association*

- *Wave shape* recommended by American standard is *1.5/40 microseconds.*
- Permissible variation *0.5 microseconds on the wave front* and *+10 or -10 microseconds for wave tail.*
- The wave front time is taken as 1.67 times the time taken by the wave to rise from 30% to 90% of its peak value.
- Wave tail time is computed same as that of BSS and ISS standard

3. *IEC (International Electro technical Commission)*

- The standard impulse wave shape belonging to 1.2/50µs.
- Should withstand higher voltage (above 220kV).

d) Important Definitions Related to Impulse Voltage (Types of impulse Voltage)

1. Chopped wave

- If an impulse voltage is applied to a piece of insulation a flash over or puncture occurs and sudden collapse of impulse voltage is called *chopped wave.*
- If the chopping takes place front part of the wave is called front chopped wave

2. Impulse puncture voltage

- Peak value of impulse voltage which cause the puncture of the material.

3. Impulse flash over voltage

- When impulse voltage applied to the insulating material flash over may or may not occur.
- If the *flashover occurs* more than *50% of number of applications,* then it is called as *impulse flash over voltage.*
- *Impulse flash over voltage* depends *polarity, duration of wave front & wave tail and nature of material.*

IMPULSE GENERATOR

2.3.1 Analysis of single stage impulse generator-expression for Output impulse voltage

"An **impulse generator** is an electrical apparatus which produces very short high-voltage or high-current surges"

It can be classified into two types

a) Impulse voltage generators

b) Impulse current generators.

Basic impulse generator

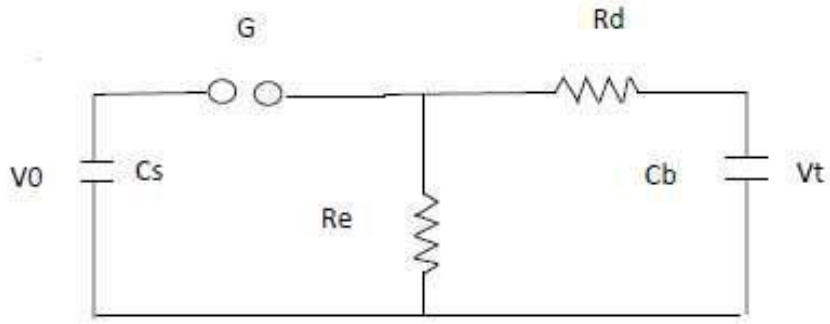

Fig. 2. Basic circuit of single stage impulse generator

a) Why impulse Generator

1. *Impulse generator* produces *high impulse voltage.*
2. High impulse voltages are used to test the *strength of electric power equipment* against lightning and switching surges.
3. *Steep-front impulse* voltages are sometimes used in *nuclear physics experiments.*
4. High impulse currents are needed for *tests* on equipment such as *lightning arresters.*
5. Fuse testing
6. Technical applications such as lasers, thermonuclear fusion, and plasma devices.

b) Basic Impulse Generator

1. An impulse generator essentially consists of a *capacitor* which is *charged to the required voltage* and *discharged through a circuit.*
2. The circuit parameters can be adjusted to give an impulse voltage of the desired shape.
3. *Cs* is charged from a dc source *until the spark gap G breaks down.*
4. The voltage is then impressed upon the object under test of capacitance Cb.
5. The *wave shaping resistors Rd and Re control the front and tail* of the impulse voltage available across Cb respectively.
6. *c)Overall the wave shape* is determined by the *values of the generator capacitance (Cs)* and the load capacitance (Cb), and the wave control resistances Rd and Re.
7. The output voltage waveform can be defined by

$$v(t) = \frac{V_0}{C_b R_d(\alpha - \beta)}(e^{-\alpha t} - e^{-\beta t}).$$

Where, v(t) instantaneous output voltage, Vo DC charging voltage, , roots of the characteristics equation, which depends on the parameters of the generator. Where

$$\alpha = \frac{1}{R_d C_b}, \quad \beta = \frac{1}{R_e C_z}.$$

c) Classification of Impulse Voltage Generator

1. Single Stage Impulse Generator

2. Multi Stage Impulse Generator

d) (Marx generator)

Single stage Impulse Generator

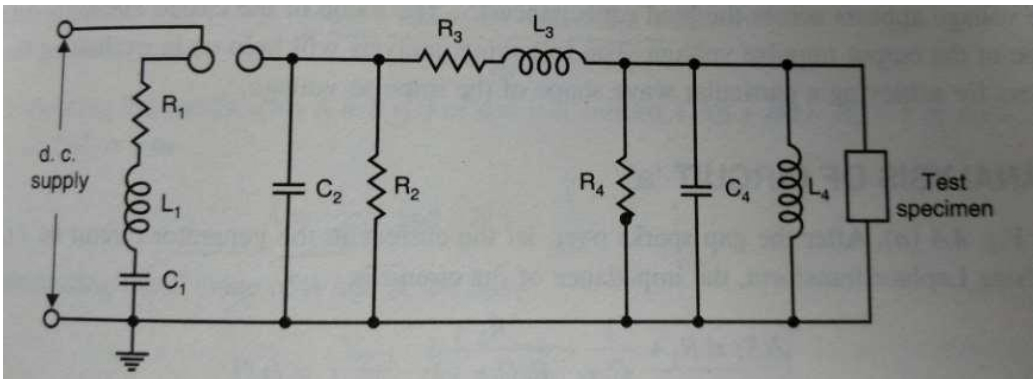

Fig: Single stage Impulse Generator Circuit

1. *The spark gap* act as voltage limiting & voltage sensing switch.
2. The apparatus which produces the *required voltages* is the **impulse generator.**

3. In high voltage engineering, an impulse voltage is normally a *unidirectional voltage* which rises quickly without appreciable oscillations, to a peak value and then falls less rapidly to zero.

Importance of each elements in impulse generator circuit

1. Capacitor (C1)-

- C1 is the capacitance of generator *charged from a dc source* to a suitable voltage.
- It will *discharge through the* ***space gap.***
- If the generator is single stage C1 is enough.

In the case of *multistage impulse generator* group of capacitor connected in **parallel** and **discharged in series.**

2. Inductor (L1)

- It is used for the inductance of the generator.
- The leads of inductor is connecting to the generator.
- It consists of Small value.

3. Resistor (R1)

- Used for **Damping purpose**
- For **Output voltage / Output waveform control.**

4. L3 and R3

- These are external elements
- connected to the generator for the waveform control/shape

5. R2 and R4

- To Control the waveform duration -R4 serve as a potential divider .

6. C2 and C4

- Capacitance to the earth of high voltage components and leads.

7. C4

- Includes the capacitance of the test object -load capacitance
- Hold the voltage to produce required value of wave shape.

8. L4

- Inductance of test object
- Influence the waveform

9. Grounding

- One terminal of impulse generator is solidly grounded.
- The polarity of output voltage can be changed by changing the polarity of dc charging voltage.

Performance parameters of single stage impulse generator

1. Efficiency $$\eta = \frac{1}{1 + C2/C1}$$

2. Impulse energy transformed during a discharge is given by

$$W = \frac{1}{2} C1 * V_0^2$$

3. The minimum value of generator capacitance is given by

$$C_1 = \frac{MVA * 10^8}{Z * V^2}$$

Equivalent circuits of single stage Impulse Generator

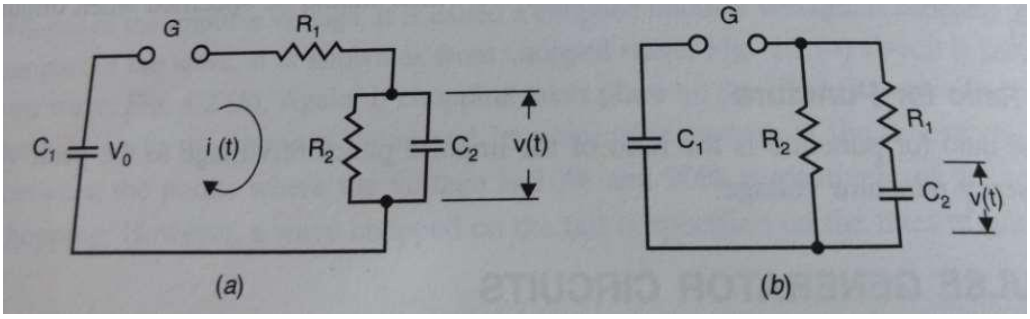

- Evaluation & analysis is easy as compared to main circuit.

Note: Do refer text book of M S Naidu & V Kamaraju – page no 172 for more information

e) Drawbacks of single stage impulse generator

1. *Physical size* of the circuit elements are *very large.*
2. *Large size of sphere.*
3. *High dc charging voltage* is required.
4. S*uppression* of *corona is difficult.*
5. Switching of very high voltage with the spark gap is difficult.

Multistage Impulse Generator

2.3.2 Multistage impulse generator working of Marx impulse

Introduction

- To obtain ***higher*** and ***higher impulse voltage.***

- In 1923 *E. Marx* suggested a ***multiplier circuit*** which is ***commonly used to obtain impulse voltage*** with as ***high a peak*** value as possible for a given charging dc voltage.

- Depending upon the charging voltage available and output voltage required "***the number of identical impulse capacitors are charged in parallel and then discharged in series***".

- Obtain total charging voltage multiplied with number of stages.

Why Multistage Impulse Generator?

A single capacitor C1 is may be used for voltages up to **<u>200 kV.</u>** Beyond this voltage, a single capacitor & charging unit may be too costly & the size becomes very large

Schematic Diagram of Multistage Impulse Generator

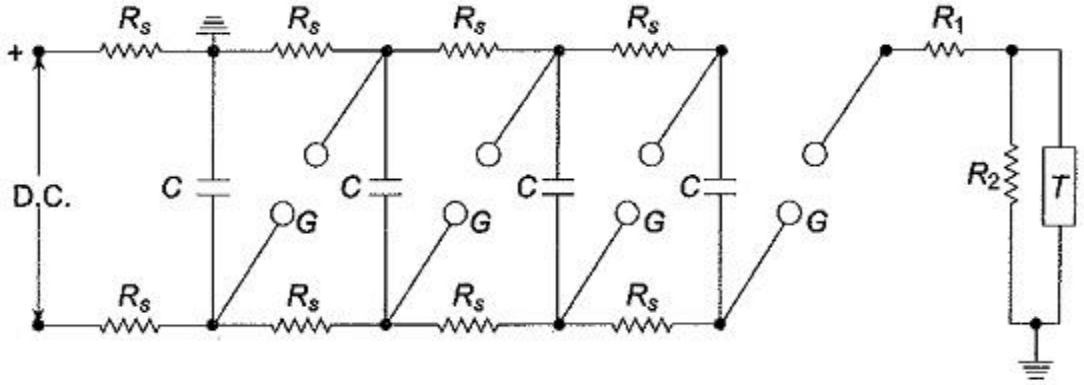

Schematic Diagram of Multistage Impulse Generator (Modified)

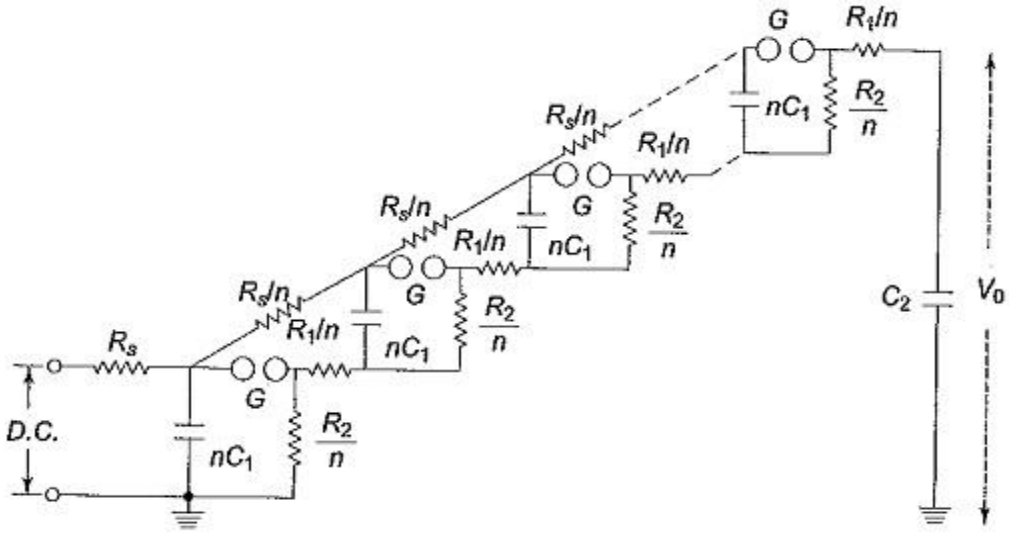

Rs is a charging resistance to limit the charging current.

1. The *generator capacitance C* is chosen such that the product of *CRs is about 10s to 1 min.*
2. The *gap spacing* is chosen such that the breakdown voltage of the gap G is greater than the charging voltage V.
3. All the capacitance are charged to the voltage V in about ***1 minute.***
4. Charging time constant=CRs (in seconds)
5. Discharging time constant = **CR1/n** (in micro seconds) , where n is the number of stages.

A ***16 stage*** Multistage Impulse Generator having a stage capacitance of ***0.280μF*** And maximum charging voltage ***300kV*** **.**

The height of the generator will be about ***15m***.

Area = 3.25m x 3.00 m

2.3.1.1Construction of Multistage Impulse Generator

1. Require a *dc power supply* for *charging* the impulse *capacitance C1* of the generator.
2. Supply consists of *step up transformer* and *rectifier.*
3. The *value of resistor* should be *constant* & *never vary* with external factors.
4. *Non-inductive wire wound resistors* are commonly used.
5. *Resistors* which will be used for the construction for multistage impulse generator *flexible to replace.*
6. *Oil paper insulated capacitor* having high rate of discharge are normally employed and reason for *reduced size of capacitor*.
7. *The sphere gap* adjusted by a *remotely controlled motor* conjunction with indicator.
8. *Chimney* provided with *dust free and dry air.*
9. A *series protective resistance* should be included in this *earthing* device to *avoid too high discharge current.*
10. Charging resistors are fixed at sphere column.
11. Front and tail resistor fixed to the generator frame.
12. *All the leads and electrodes* should *dimensioned properly* to avoid *corona discharge.*

2.3.1.2 Components of a multistage impulse Generator

A Multistage impulse generator requires several components parts for Flexibility & production of the required wave shape.

1. DC Charging set

2. Charging Resistors

- Non inductive high value of resistance about *10 to 100k*.Ω
- Each resistance will be designed to have a maximum voltage *between 50 and 100kV.*

3. Generator Capacitors and spark gap

- Capacitor designed for several charging and discharging operations.
- Capacitors will be capable of having 10kA of current.
- Spark gaps will be usually spheres or hemispheres of 10 to 25 cm diameter.

4. Wave-shaping Resistors and Capacitors -Non inductive wound type -Capable of discharging 1000A current -50 to 100kV max. designed voltage

- Load capacitance will be 1 to 10nF

5. Triggering System

- Contains trigger spark gap to cause spark breakdown of the gaps.

6. Voltage Dividers

- Resistor type or damped capacitor type
- oscilloscope with recording arrangement are provided for measurement of voltage across test object

7. Gas insulated impulse generator

- Above 4MV impulse generator, tall & large space requirement
- 4.8MW- nearly 30m height
- N2, compressed gas and SF6 will provide proper insulation.

2.4 Triggering and Synchronization of the impulse Generator

Why triggering & synchronization?

- *Control* for *charging process* of impulse generator.
- To integrate the measuring devices.
- Chopping gap control.
- CRO is used for measuring and studying the effect of impulse wave on the performance of the insulation of the equipment.
- Impulse waves are of *shorter duration.*
- It is necessary that operation of the *generator* and the *oscillograph* should be *synchronized accurately.*
- *Time sweep circuit* is main part of *oscillograph*
- The *time sweep circuit* of the oscillograph should be initiated at the time slightly before the impulse wave reaches the deflecting plates.
- The *impulse generator drives* both *sweep and triggering circuits.*
- The *sweep circuit operating first* , triggering circuit works after 0.1 to 0.5 microseconds.

Triggering -3 Stages

1. *Fix the gap distance* between the spheres and increase the stage applied dc voltage till the flashover occurs.
2. *Set the gap distance* between the spheres large enough apply a desired voltage across them and then reduce the gap distance till flashover takes place.
3. *Fix both, the desired stage voltage* and *corresponding gap distance* within prescribed limits. Then apply the trigger pulse to the trigatron on the first stage.

Triggering and Synchronization of the impulse Generator

- ***Two methods are available***

1. **<u>Three electrode gap arrangement</u>**
2. **<u>Trigatron gap</u>**

2.4.1 Triggering of impulse generator by three electrode gap arrangement

Triggering of impulse generator by

(i) Three electrode gap arrangement

1. '*Three electrode gap arrangement*' is one of the method for triggering and synchronization of impulse generator.
2. The *spacing* between *2 spheres is adjusted* so that *two series gap are able to withstand charging voltage* of impulse generator.
3. *Central sphere* is called *control sphere.*
4. *A high resistance* is connected between the *outer sphere* and its *centre point* is connected to *control sphere.*
5. The voltage between outer sphere is equally divided between two sphere gap

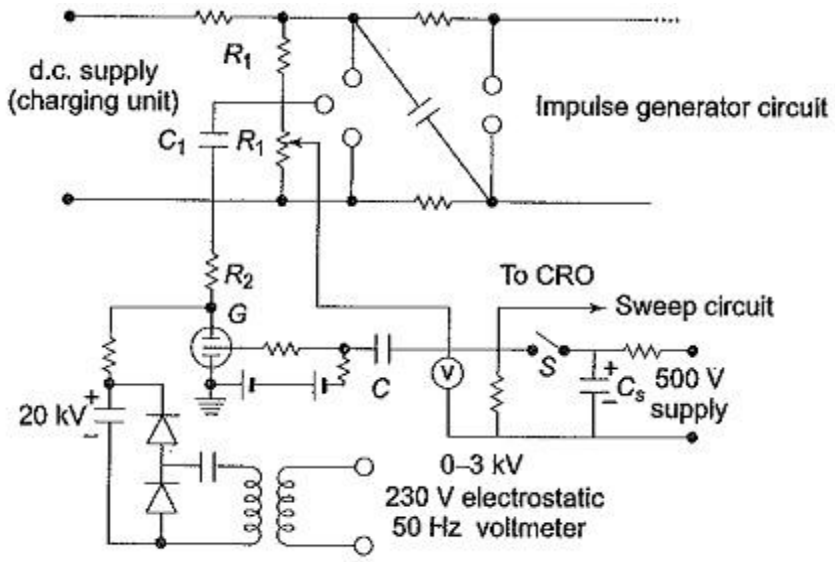

To test the dielectric breakdown strength of three sphere gap arrangement

1. First *impulse generator* is to be *charged* to a voltage which is *slightly less than the breakdown voltage of the gap.*

2. *Apply an impulse wave* of either polarity & peak voltage not less than (1/5) th of charging voltage to the control sphere.
3. Check whether the dielectric breakdown has occurred or not.

Operation of three sphere gap arrangement

- **Two '*three sphere gap arrangement*' is included in the synchronization & triggering circuit**

1. Three sphere gap arrangement'

1. The switch's' is closed which initiate the sweep circuit of the oscillograph.
2. The same impulse is applied to the *thyratron tube.*
3. The inherent time delay of thyratron ensure *sweep circuit operate first* before the starting of high impulse wave.
4. We can be able to create further delay by using Capacitance-Resistance (R1C1) circuit.
5. The tripping impulse is applied through capacitor C2.
6. During charging period the voltage across thyratron is about +20kV.

2. Trigatron gap

1. **A device, known as "*Trigatron*", is used to control the flash over at the spark gaps in order to get a desired magnitude of the output voltage repeatedly.**
2. **Function- used as 'First gap of impulse generator'**
3. **"*Trigatron*", consists essentially of three-electrodes.**
4. **Three electrodes are**
1. *High voltage electrode* is a sphere- indication of HV
2. *Earthed electrode* is also a sphere. The spherical configuration gives homogeneous field.
3. *Metal rod electrode/ Trigger electrode* be the third electrode

5.5 Diagram for "Trigatron spark gap"

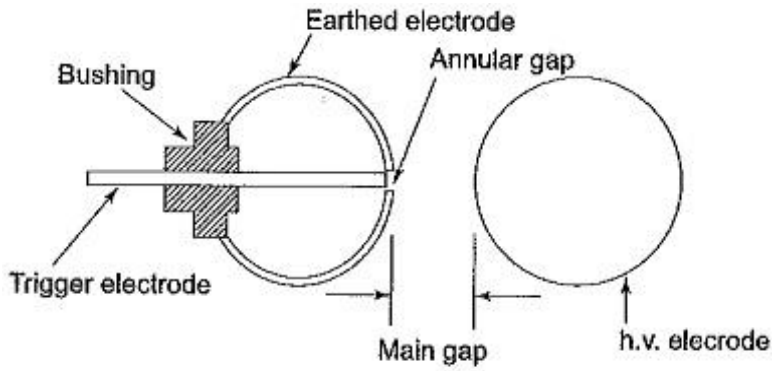

a) Construction of "Trigatron spark gap"

1. A *small hole is drilled into earth electrode* into which metal rod projects (trigger rod).
2. The annular gap between the rod and the surrounding hemisphere is 1 mm.
3. A glass tube is fitted over rod electrode.
4. The potential of metal electrode and earth electrodes are same.
5. Both are connected through a high resistance.
6. Tripping pulse or control pulse applied between metal and earth electrodes.
7. When the tripping pulse is applied, main field is distorted.
8. Reason for dielectric breakdown.

b)Tripping circuit of trigatron

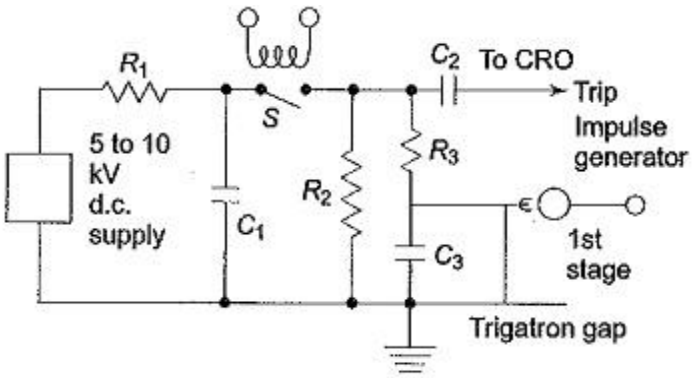

(b) Tripping circuit using a trigatron

c) Operation of Tripping circuit of trigatron

- The *capacitor C1* is charged through *high resistance R1*
- Switch S is closed
- *A pulse is applied to a sweep circuit* of the oscillograph through the *capacitor C2*
- Same time capacitor *C3 is charged*
- Triggering pulse is applied through *trigger electrode* (metal rod electrode)
- The *requisite delay* in triggering the generator can be provide by *R3 and C3*
- The residual charge on the *C3* can discharged through *R3*
- Now a day's *laser is used* for *tripping the spark gap*
- The trigatron also *has a phase shifting circuit* associate with the *synchronization of initiation time* with *external Alternating voltage*.
- *Design* is to *prevent the overcharging* of capacitor
- An *indicating device* shows whether the generator is going to fire properly or not.

2.4.1 Generation of switching surges/ switching impulse voltage

- *Switching surges* has an important role in the *design of insulation* for extra high voltage transmission line (EHV) & power systems.
- *Switching surge* is a *short duration transient voltage* produced in the system due to *sudden opening or closing of switch or circuit breaker.*
- Switching surges may be produced due to *arcing at faulty power systems.*
- The *transient voltage* may be oscillatory wave or damped oscillatory wave having *frequency* of a *few hundred Hz to a few kilo Hz*.
- Wave front time= 0.1 to 10ms
- Wave tail time ~ 1ms
- Switching surges contain higher energy than lightning impulse voltage.

- ***Types of circuit*** **produced switching surges**

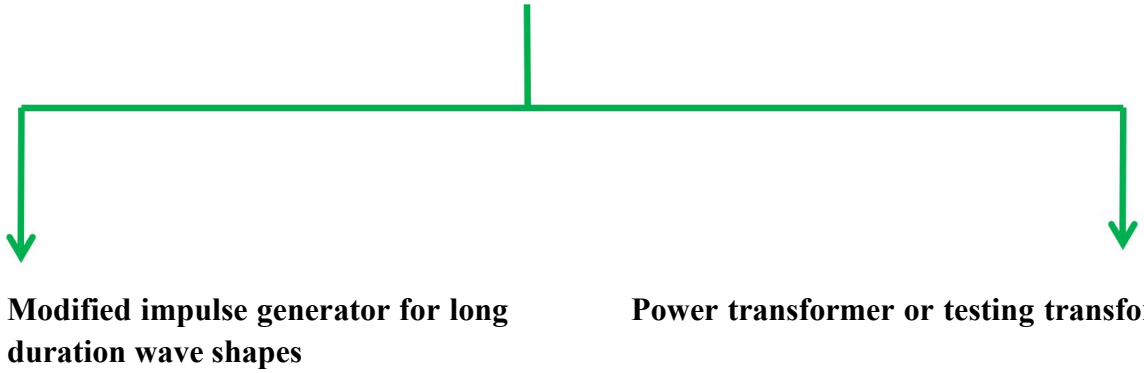

2.5 Impulse Current Generation

A *high impulse current generator* consists of *large number of capacitor* connected in *parallel* to a common discharge path. i.e by using '*capacitor bank*'.

- The generation of impulse current waveforms of high magnitude (nearly 100 KA) find *applications* like

1. test work
2. basic research on non-linear resistors -electric arc studies
3. electric plasma state

a) Definition of impulse current waveforms

- The wave shapes used in testing surge diverters are (4/10 micro seconds-wave front) and (8/20 micro seconds –wave tail).

- Tolerance allowed in between +10% and -10%.

- Wave shapes are normally rectangular shape.

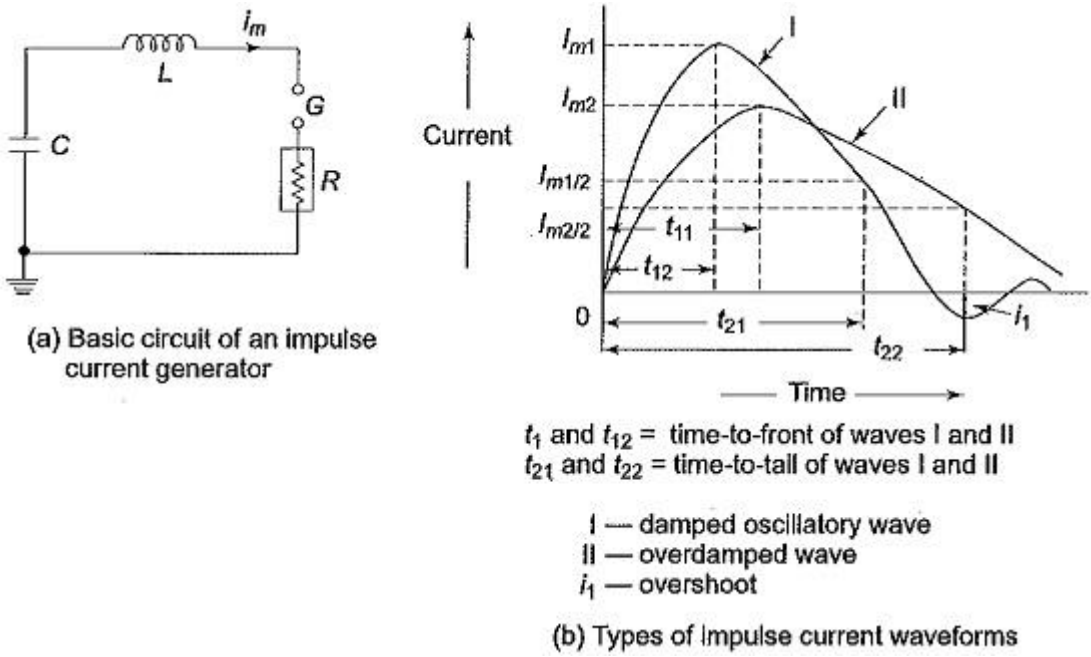

(a) Basic circuit of an impulse current generator

(b) Types of impulse current waveforms

b) Circuit producing impulse current wave

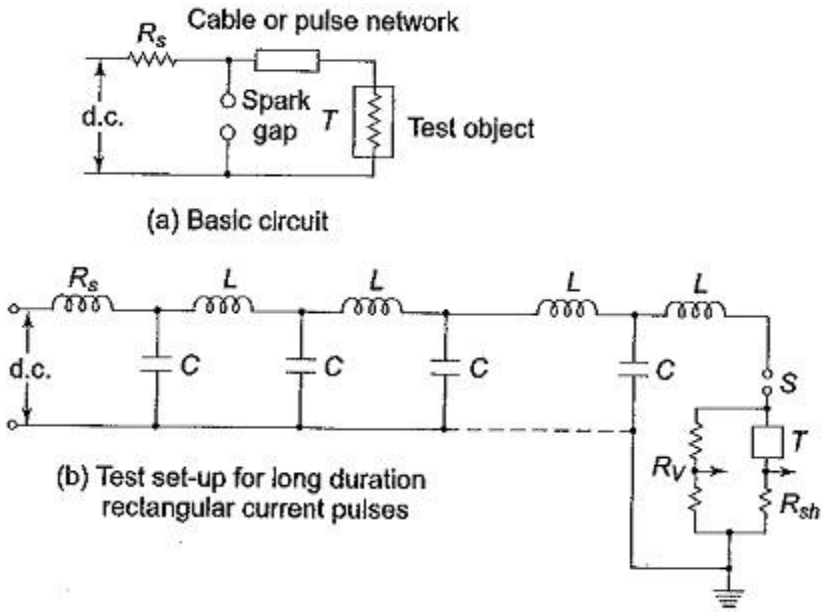

(a) Basic circuit

(b) Test set-up for long duration rectangular current pulses

- *Number of capacitors* connected in parallel & discharged in parallel in the circuit.
- In order to minimize the value of inductance capacitance are subdivided into smaller units.

c) Components

1. *DC charging* unit giving variable voltage to capacitor bank.
2. Additional *air core inductor* having high current value.
3. Oscillograph- measurement purpose.
4. Triggering units & spark gap.

d) Generation of Rectangular Current Pulses

1. The generation of rectangular current pulse can be done by '*discharging a pulse network or cable previously charged*'
2. To produce a rectangular pulse a coaxial cable of surge impedance Z0 is used.

Course Outcomes

At the end of the course the student will be able to:

CO-2: Apply the principles of generation of high voltage, currents and Impulse voltages.