MODULE 5: Non-Destructive Testing of Materials and Electrical Apparatus:

Syllabus

5.1 Introduction, Measurement of Dielectric Constant and Loss Factor, Partial Discharge Measurements.

5.2 High Voltage Testing of Electrical Apparatus: Testing of Insulators and Bushings, Testing of Isolators and Circuit Breakers

5.3 Testing of Cables, Testing of Transformers, Testing of Surge Arrestors, Radio Interference Measurements, Testing of HVDC Valves and Equipment.

5.1 Introduction

What is Non-destructive Testing?

- It is a wide group of analysis techniques used in science, industry & Engineering to evaluate the properties of Insulating material, component or system without causing damage.
- It is very difficult to test the quality of insulating material after it forms part of equipment, suitable tests must be done to ensure in the said range of operation.
- Non-Destructive Testing (NDT) is ensure that the material is not destroyed as in the case of high voltage testing.
- NDT helps to estimate the electrical properties such as resistivity, dielectric constant & loss factor, loss angle & dielectric loss over a wide frequency range.
- NDT is commonly used in , mechanical engineering, petroleum engineering, electrical engineering, civil engineering, systems engineering, aeronautical engineering, medicine, and art.

5.1.1 Dielectric loss

1. **Dielectric loss** measure the quantity of a dielectric material's inherent dissipation of electromagnetic energy converted into heat.
2. The dielectric loss can be expressed in terms of loss angle δ.
3. An efficient dielectric material supports a **varying charge with minimal dissipation of energy in the form of heat**.

Dielectric loss angle

1. **tan δ is called as loss angle** or dissipation factor testing or loss tangent.
2. Helps to determine the quality of the cable insulation.
3. The cable and its insulation is compared to a parallel plate capacitor.
4. In a perfect capacitor, the voltage and current are phase shifted 90 degrees.
5. If there are impurities in the insulation, like water trees, electrical trees, moisture and air pockets, etc. the resistance of the insulation decreases.
6. Resulting in an **increase in resistive current** through the insulation and It is no longer a perfect capacitor
7. The current and voltage will no longer be shifted 90 degrees. It will be something less than 90 degrees.

8. The extent to which the phase shift is less than 90 degrees is indicative of the level of insulation contamination/DIELECTRIC LOSS
9. This "Loss Angle" is measured and analyzed.

Fig represents an equivalent circuit of a cable, The tangent of the angle δ is measured

1. Perfect cable insulation δ=0
2. tan δ helps to find out the life expectancy of dielectrics

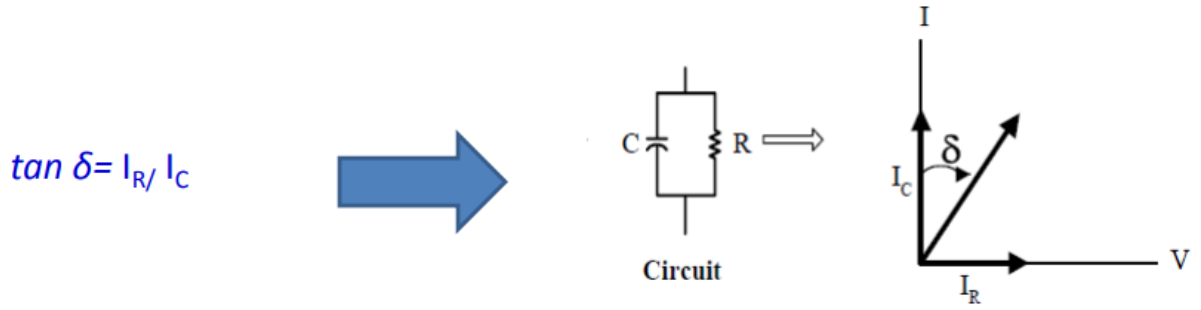

How to measure dielectric loss and loss angle of a dielectric material?

By using the following devices

1.HIGH VOLTAGE SCHERING BRIDGE

2.TRANSFORMER RATIO ARM BRIDGE

A) What is Schering bridge?

1. The Schering Bridge is an electrical circuit used for measuring the insulating properties of **electrical cables and equipment.**
2. Accurate value of capacitance can be measured by using Schering bridge.
3. It is used to measure insulation properties such as dielectric loss and loss angle.
4. It has the advantage that the balance equation is independent of frequency.
5. We can able to find the Unknown capacitance by using Schering bridge ,

   i.e C1= C2R4/R3 R1=R3C4/C2

   Loss angle tan δ= wR_1C_1

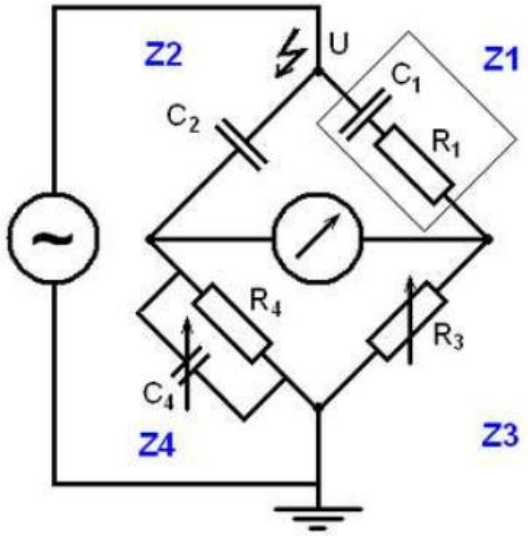

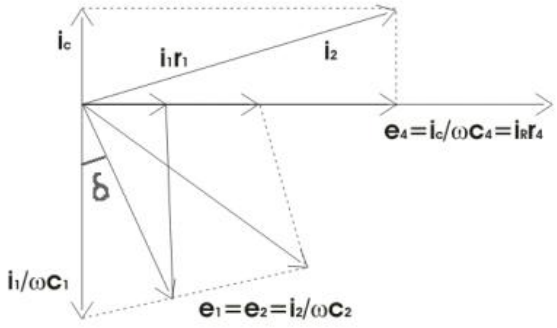

In this diagram:

- C1 = capacitor whose capacitance is to be determined,
- R1 = a series resistance representing the loss in the capacitor C1,
- C2 = a standard capacitor,
- R3 = a non-inductive resistance,
- C4 = a variable capacitor,
- R4 = a variable non-inductive resistance in parallel with the variable capacitor C4.

5.1.2 Transformer Ratio Arm Bridge

Why Transformer Ratio Arm Bridge?

1. If you are proceeding with conventional bridge balancing methods, the following disadvantages will occur
2. For high frequency measurements, the arm with high resistance leads to difficulties due to their residual inductance, capacitance and skin effect.
3. If the length of arm is large, shielding difficulties.

B) What is Transformer Ratio Arm Bridge?

1. This bridge provide more accurate results for the small capacitance measurements.
2. Using at least two arms.
3. Two types of Transformer Ratio Arm bridges are available
   a)Voltage Ratio Arm bridge
   b)Current Ratio Arm bridge

a)Voltage Ratio Arm bridge -Suitable for high frequency low voltage application

b)Current Ratio Arm Bridge -Used for high voltage low frequency application

Circuits for Transformer Ratio Arm Bridge

A) Transformer Voltage Ratio arm bridge

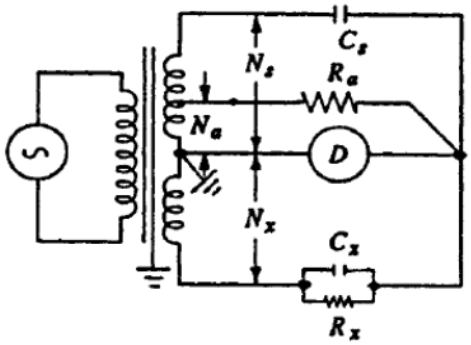

Assume transformer is ideal.

$$\frac{V_s}{V_x} = \frac{N_s}{N_x} = \frac{C_x}{C_s}; \text{ and } \frac{R_x}{R_a} = \frac{N_x}{N_a}$$

where C_x and C_s are unknown and standard capacitances respectively, R_x and R_a are unknown and standard resistances, and N_x, N_a, and N_s are the corresponding turns of the transformer ratio windings.

1. In practical situation due to the presence of magnetizing current and the load currents, the voltage ratio slightly differ from the turns ratio.
2. Those errors are ratio errors & load error.

B) Transformer Current Ratio arm bridge

1. Suitable for high voltage low frequency applications.
2. The main component of the bridge is a three winding current transformer with very low losses & leakage (core of high permeability).
3. Transformer is carefully shielded & protected against mechanical vibrations.

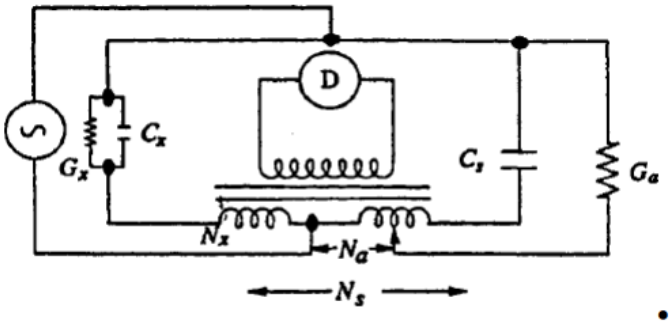

Current comparator bridge

- Current ratio method
- Full voltage is applied across test capacitor
- Standard capacitor has to be built For high voltage.

$$E_f \approx \frac{C_s}{C_f} E$$ Gain of the amplifier

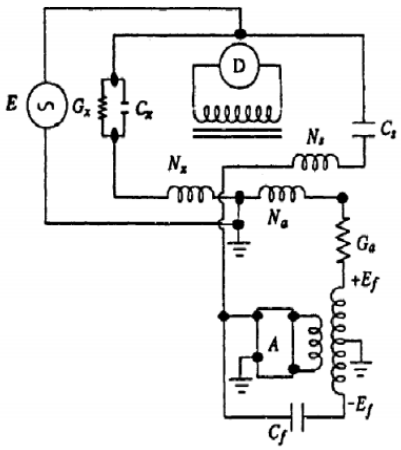

Current comparator for high voltage application

Cf- Balancing capacitor
Cs- Standard capacitor

Ef – Proportional emf

At balance , there is no voltage across the current Comparator winding

Transformer Current Ratio arm bridge- Calculations

The balance equations of the bridge are

$$C_x = C_s \frac{N_s}{N_x}; \quad G_x = \frac{C_s}{C_f} \frac{N_a}{N_x} G_a$$

$$\tan \delta = \frac{G_x}{\omega C_x} = \frac{1}{\omega C_f} \frac{G_a N_a}{N_x}$$

G_x and G_a are unknown and standard conductances, and C_f is the balancing condenser.

5.1.3 Partial Discharge (PD)

1. Partial discharge (PD) is a localized dielectric breakdown of a small portion of a solid or fluid electrical insulation system under high voltage stress.
2. The distance between two electrode is only partially bridged.
3. PD is responsible for reducing the insulation strength.

4. PD can occur in a gaseous, liquid or solid insulating medium.
5. It often starts within gas voids, such as voids in solid epoxy insulation or bubbles in transformer oil.
6. PD usually begins within voids, cracks, or inclusions within a solid dielectric , at conductor-dielectric interfaces within solid or liquid dielectrics, or in bubbles within liquid dielectrics.
7. Since PDs are limited to only a portion of the insulation
8. PD can also occur along the boundary between different insulating materials.
9. Partial discharge that only partially bridges the dielectrics or insulating between two conductors.
10. Examples of partial discharge: Internal discharge (voids in a dielectric material) , surface discharge (Discharge from the conductor into gas or liquid or solids) & corona discharge.
11. Partial discharges which in course of time reduce the strength of insulation leading to a total or partial failure or breakdown of insulation.

The equivalent circuit of a dielectric incorporating a cavity can be modelled as a capacitive Voltage divider in parallel with another capacitor.

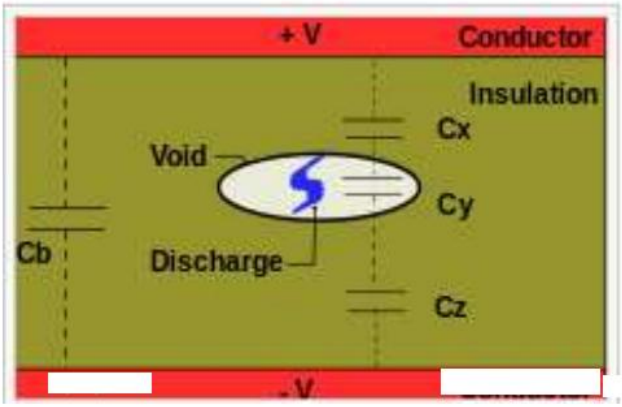

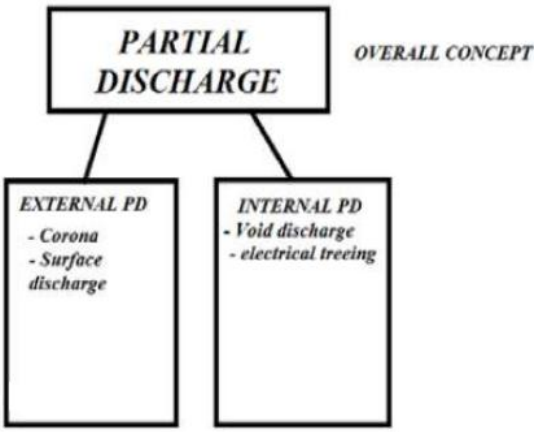

Reasons for Partial Discharge

1. Poor design of insulation
2. Failure during manufacturing or assembling
3. Normal ageing
4. Degradation

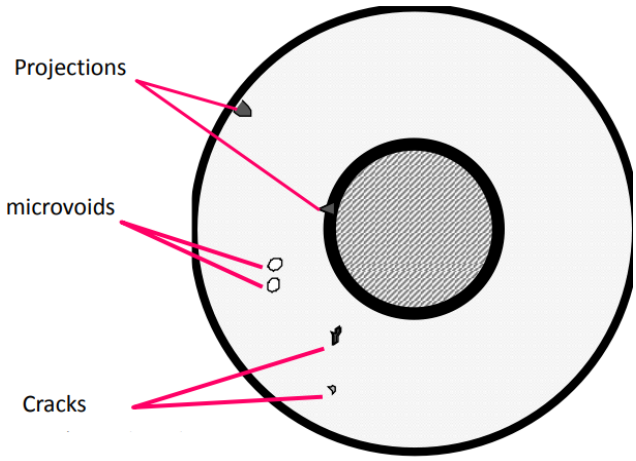

Types of partial Discharge

1.Corona or gas discharge- due to non uniform field, sharp edge of electrodes etc.

2.Surface discharge- interfacing of different dielectric material results over stress

3.Cavity discharge- over stress due to cavities

4.Treeing channels

Classification of Partial Discharge

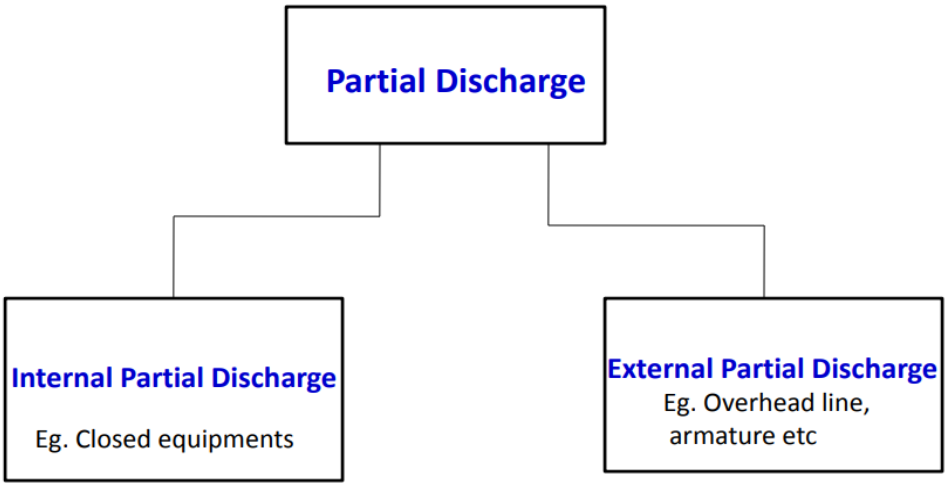

5.1.3.1 Need for discharge detectors in dielectric measurement

1. Detectors are available in the wide range of frequency
2. Selection of detectors depends on bridge circuit & applications.
3. Dc measurements- dc galvanometer & dc amplifier with micro ammeter.
4. Power frequency measurements-vibration galvanometer.
5. Audio frequency range-tuned null detectors.
6. CRO or DSO can be used as a detector , if the requirement of sensitivity is very low.

a) Discharge Detection Methods

• Various methods are available for measuring discharge detection especially for analyzing Partial Discharge (PD).

1.Discharge Detection using 'straight detectors'

2.Balanced detection methods

3.Narrow band & Wide band circuits

1.Discharge Detection using 'straight detectors'

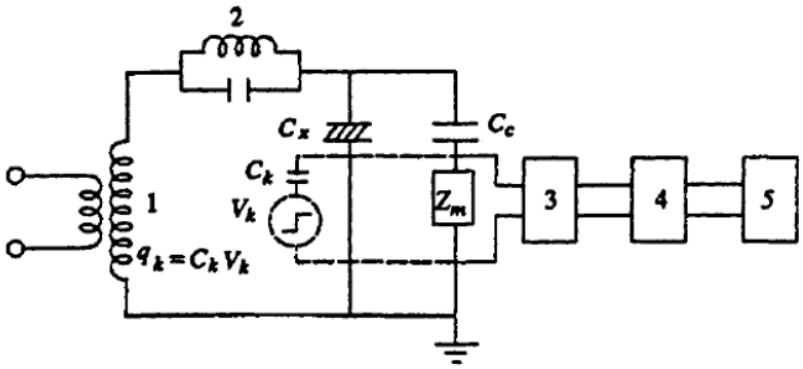

1 — H.V. testing transformer
2 — Filter
3 — Band pass filter
4 — Amplifier
5 — Display unit (CRO or pulse counter or multi-channel analyser unit)

C_x — Sample or test piece
C_c — Coupling condenser
Z_m — Detector impedance
V_k — Calibrating pulse
C_k — Calibrating capacitor
q_k — Calibrator charge

Component descriptions of 'straight detectors'

1. HV Transformer is free from discharge
2. The resonant filter is used to prevent any pulses starting from the capacitance of the windings and bushings of the transformer
3. Cx is the test object- 100 pF to 0.1pF
4. Cc is the coupling capacitor
5. Zm is the detection impedance
6. The signal is developed across detection impedance Zm
7. Then the signal is passed through band pass filter (10kHz frequency) ,amplifier and displayed Unit (on the CRO & multi channel analyzer unit)

Discharge patterns

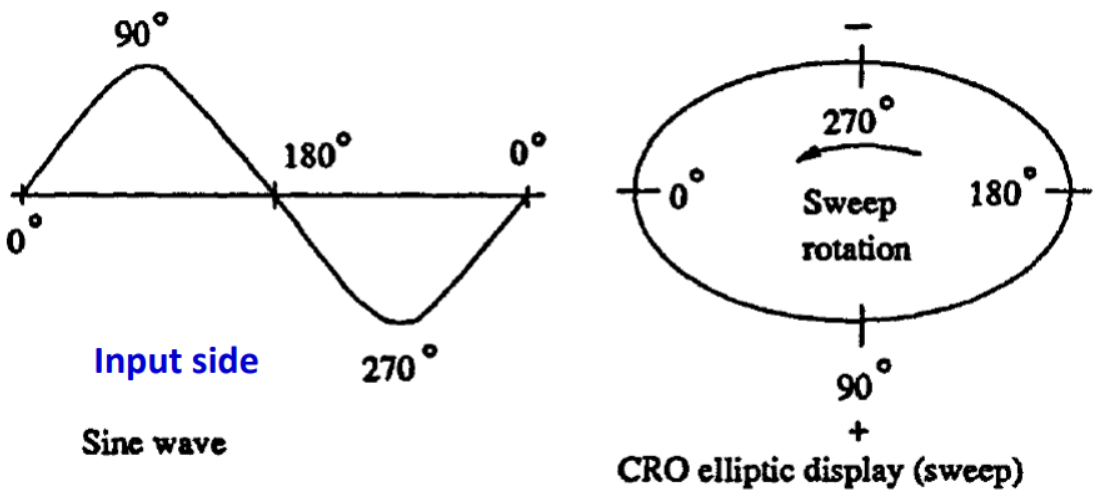

(a) Elliptic sweep display

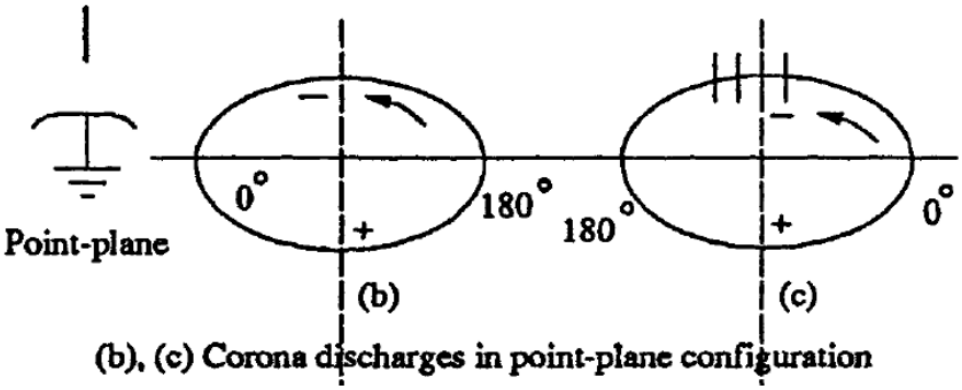

(b), (c) Corona discharges in point-plane configuration

Discharge patterns – voids in insulating materials

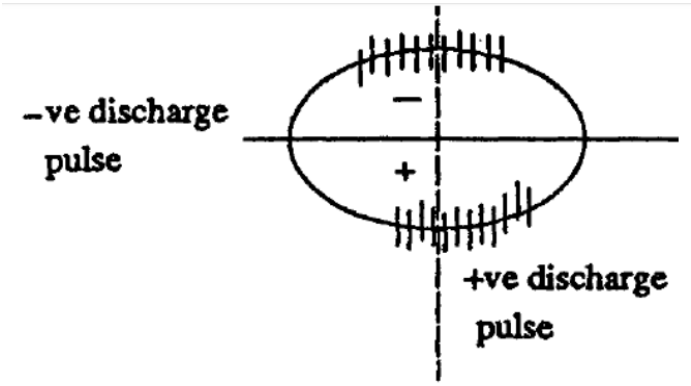

(d) Discharges in voids in the insulation

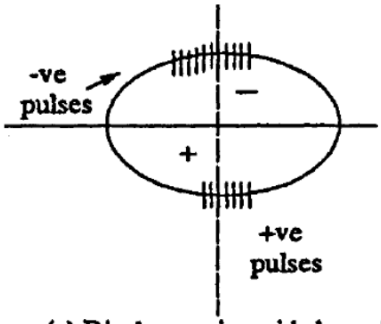

(e) Discharges in voids bound on one side with insulation, and on the other side by a conductor

Drawbacks of straight detectors

1. Noise problems.
2. The filter used to block the noise sources may not be effective.
3. External disturbances are not fully rejected.
4. Tuning of filters is a difficult task.

2.Discharge Detection using 'Balanced Detection Method'

Two methods

1. Balance Detector using Schering Bridge

2.Balance Discharge Detector Schemes (Differential detector)

1. Balance Detector using Schering Bridge

1. In this method test object is not grounded.
2. The bridges are tuned & balanced at 50 Hz.
3. External interferences from outside is balanced out.
4. A filter is used across the detector terminals to block 50Hz components present & pass the signals in between 5 to 50kHz (Band pass filter).
5. Only internally generated pulses (from the test object) are detected.
6. Internally generated pulse signal is amplified by using an amplifier.
7. CRO gives the display of pulse pattern.

Circuit arrangement for Balance Detector by using Schering Bridge

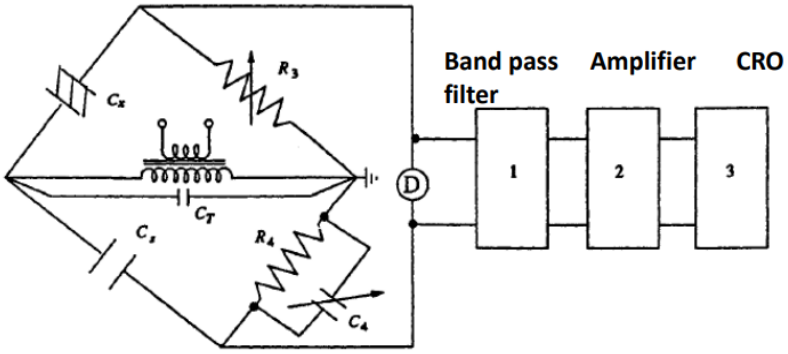

D — Power frequency detector
1 — Filter (band pass)
2 — Amplifier
3 — Display unit — CRO or counter

Balanced detector using Schering bridge

2.Balanced Discharge Detection Scheme (Differential Detector)

1. Modified scheme of balanced discharge detection using Scherings bridge.
2. Another test sample called dummy sample is used in the place of standard capacitor •
3. Capacitance and tan δ of dummy coil & test sample are made approximately equal, but not exactly equal.
4. Advantages- i)capacity for better rejection of external noises, ii) better resolution & iii)wide frequency band
5. Drawbacks – If two discharges occur in both samples simultaneously , they cancel out, but this is very rare.

Circuit for Balanced Discharge Detection Scheme (Differential Detector)

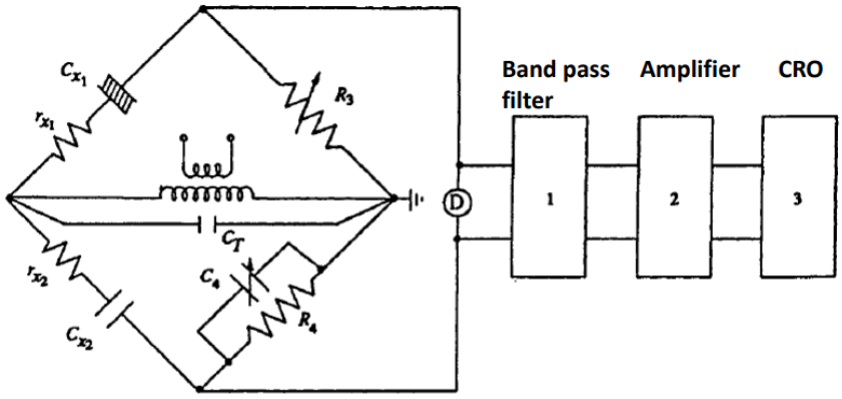

Differential detector

Balanced discharge detector schemes

Factors affecting discharge detection

1. Applied voltage
2. Different sample of material
3. Different void size

5.2 High Voltage Testing of Electrical Apparatus

Definitions of terminologies:

1.Disruptive Discharge Voltage

• The voltage which produces the loss of dielectric strength of an insulation.

• Collapse f voltage & passage current

• Permanent loss for solid dielectrics, temporary loss for liquid and gaseous dielectrics.

2.Flashover

-when a discharge taking place in between two electrodes in a gas or liquid is called flashover.

3.Puncture

-when the discharge occur through solid insulation medium is called puncture

4.**Withstand voltage-** The voltage which has to be applied to a test object under specified condition in a withstand test is called withstand voltage. (as per IS:731 & IS:2099-1963)

5.**Fifty per cent flashover voltage** – This is the voltage which has a probability of 50% flashover when applied to a test object which results loss of insulation strength temporarily.

6.**Hundred per cent flash over voltage**-The voltage ,that causes a flash over at each of its applications under specified conditions , when applied to test objects as specified, is 100% flash over voltage

7.**Creepage Distance**- It is the shortest distance between two metal fittings on the insulator or dielectrics.

8.**AC Test Voltage**- Alternating test voltage should have power frequency in the range of 40 to 60 Hz and approximately sinusoidal. The deviation allowed for the sinusoidal wave is 7%. The deviation checked by measuring peak value, average vale & RMS value continuously. Computing average value, RMS value & Form factor continuously.

9. **Impulse Voltage**- Impulse voltages are characterized by polarity, peak value, time to front, and time to half the peak value after the peak

. • The time to front is defined as 1.5 times to time between 30% and 90% of the peak value in the rising portion of the wave.

10.**Reference Atmospheric Condition**

• The electrical characteristics of the insulators and other apparatus are normally referred to the reference atmospheric conditions

. • According to the Indian Standard Specifications

Temperature	: 27°C
Pressure	: 1013 millibars (or 760 torr)
Absolute humidity	: 17 gm/m^3

Based on British Standard Specifications

Temperature	: 20°C
Pressure	: 1013 millibars (760 Torr)
Absolute humidity	: 11 g/m^3 (65% relative humidity at 20°C)

- The flashover voltage of the test object is given by $V_s = V_a \times \frac{h}{d}$

V_a = voltage under actual test conditions
V_s = voltage under reference atmospheric conditions
h = humidity correction factor and
d = air density correction factor

11. Air density correction factor

- The air density correction factor is given by,

$$d = \frac{0.289b}{273+t} \text{ for } 20°C$$

$$\text{or, } \frac{0.296b}{273+t} \text{ for } 27°C$$

where
b = atmospheric pressure in millibars, and
t = atmospheric temperature, °C.

5.2.1 Test on Insulators

High voltage test includes

i)The power frequency tests &

ii) Impulse tests: All insulators are tested for both categories of test.

i)**Power frequency test:** Dry and wet flash over test, Wet & dry withstand tests (1 minute)

ii)**Impulse Tests:** Impulse withstand voltage test, Impulse flash over test and pollution testing

Why testing on insulators are required….?

1. To check the design features
2. To check the quality of test piece

i) Power frequency tests

(a) Dry and wet flashover test:

• The AC voltage of power frequency is applied across the insulators & increased at an uniform rate of about 2% of the estimated test voltage, checking the breakdown.

• If the test is conducted without any rain or precipitation it is called as dry flashover test.

• If the test is done under condition of rain called as wet flash over test.

(b)Wet & dry withstand test

• In these tests, the voltage specified in the relevant specification is applied under dry or wet conditions for a period of one minute with an insulator mounted as in service conditions

. • The test piece should withstand the specified voltage.

ii)Impulse tests

(a)Impulse withstand voltage test

• This test is done by applying standard impulse voltage of specified value under dry condition with positive & negative polarities.

• 5 consecutive waves are passed.

• That shouldn't case flashover or puncture

(b) Impulse Flash over test

• Test is done under the specified voltage.

• Adjust the test voltage for the exact 50% flash over value.

• The insulation surface should not damaged.

(c) Pollution Testing

• Creating artificial pollution environment (salt fog test).

• Test duration – 1 hour.

Testing on Bushings

High Voltage Test Bushings Consisting of Three tests, namely

1. **Power Frequency Tests**
2. **Impulse Voltage Tests**
3. **Thermal Tests**

Power Frequency Tests:

Power Factor—Voltage Test: In this test, the bushing is set up as in service or immersed in oil. It is connected such that the line conductor side of the high voltage Schering bridge. Voltage is applied up to the line value in increasing steps and then reduced. The capacitance and power factor (or tan δ) are recorded at each step. The characteristic of power factor or tan δ versus applied voltage is drawn. This is a normal routine test but sometimes may be conducted on percentage basis.

Internal or Partial Discharge Test: This test is intended to find the deterioration or failure due to internal discharges caused in the composite insulation of the bushing. This is done by using internal or partial discharge arrangement. The voltage versus discharge magnitude as well as the quadratic rate, gives an excellent record of the performance of the bushing in service. This is now a routine test for High Voltage Test Bushings.

Momentary Withstand Test at Power Frequency: This is done as per the Indian Standard specifications IS: 2099 applied to bushings. The test voltage is specified in the specifications. The bushing has to withstand without flashover or puncture for a minimum time (~ 30s) to measure the voltage. At present this test is replaced by the impulse withstand test.

One Minute Wet Withstand Test at Power Frequency: The most common and routine tests used for all electrical apparatuses are the one minute wet, and dry voltage withstand tests. In wet test, voltage specified is applied to the bushing mounted as in service with the rain arrangement as described A properly designed bushing has to withstand the voltage without flashover for one minute. This test really does not give any information for its satisfactory performance in service, while impulse and partial discharge tests give more information.

Visible Discharge Test at Power Frequency: This test is intended for determining whether the bushing is likely to give radio interference in service, when the voltage specified in IS: 2099 is applied. No discharge other than that from the arcing horns or grading rings should be visible to the observers in a dark room. The test arrangement is the same as that of the withstand test, but the test is conducted in a dark room.

Impulse Voltage Tests:

Full Wave Withstand Test: The bushing is tested for either polarity voltages as per the specifications. Five consecutive full waves of standard waveform are applied, and, if two of them cause flashover the bushing is said to have failed in the test. If only one flashover occurs, ten additional applications are done. The bushing is considered to have Passed the test if no flashover occurs in subsequent applications.

Chopped Wave Withstand and Switching Surge Tests: The chopped wave test is sometimes done for High Voltage Test Bushings (220 kV and 400 kV and above). Switching surge flashover test of specified value is nowadays included for High Voltage Test Bushings. The tests are carried out similar to full wave withstand test.

Thermal Tests:

Temperature Rise and Thermal Stability Tests: The purpose of these tests is to ensure that the bushing in service for long does not have an excessive temperature rise and also does not go into the "**thermal runaway**" condition of the insulation used.

Temperature rise test is carried out in free air with an ambient temperature below 40°C at a rated power frequency (50 Hz) a.c. current. The steady temperature rise above the ambient air temperature at any part of the bushing should not exceed 45°C. The test is carried out for such a long time till the temperature is substantially constant, i.e. the increase in temperature rate is less than I °C/hr. Sometimes, the bushings have to be operated along with transformers; of which the temperature reached may exceed 80°C. This temperature is high enough to produce large dielectric losses and thermal instability. For High Voltage Test Bushings this is particularly important, and hence the thermal stability test is done for bushings rated for 132 kV and above.

The test is carried out with the bushing immersed in oil at a maximum temperature as in service, and the voltage applied is 86% of the nominal system voltage. This is approximately √2 times the working voltage of the bushing and hence the dielectric losses are about double the normal value. The additional losses account for the conductor ohmic losses. It has been considered unnecessary to specify the thermal stability test for oil-impregnated paper bushings of low ratings; but for the large High Voltage Test Bushings (1600 A, 400 kV transformer bushings, etc.), the losses in the conductor may by high enough to outweigh the dielectric losses.

Testing of Isolator & Circuit Breaker

Importance of isolator

1. Disconnector switch used for isolating the section of the circuit from any energized conductor .
2. In HV , isolators are used in conjunction with circuit breaker
3. Isolators opened after a circuit breaker has opened the circuit, and closed before the circuit breaker closes the circuit.
4. Off-load or minimum current breaking mechanical switch.
5. Isolator is operated after the circuit breaker to completely isolate the circuit.
6. Isolator is used to isolate the circuit permanently after a fault. Circuit breaker is used to disconnect the circuit temporarily. That is the main difference between an isolator and CB.

Importance of circuit breaker

1. A circuit breaker is an automatically operated electrical switch designed to protect an electrical circuit from damage caused by overload or short circuit.
2. Its basic function is to detect a fault condition and interrupt current flow.
3. On load or high current breaking switch

Why do we perform the testing of Isolators & Circuit breaker?

1. To evaluate operating characteristics
2. To study the constructional features
3. To calculate electrical parameters/characteristics

4. **Conventional tests available are:**
   1.The dielectric tests or over voltage tests
   2. Impulse test
   3.The temperature rise tests (Thermal test)
   4.The mechanical tests
   5. The short circuit tests

1. Dielectric tests or overvoltage tests

Objectives of Dielectric test:

1. This test consists of overvoltage withstand test of power frequency.
2. Testing of withstanding lightning & switching impulse voltage.
3. This test is done for checking internal & external insulation level. ie circuit breaker in open and closed position.
4. Apply the test voltage separately when circuit breaker is in open and closed position.

Checking the internal insulation level

1. In the open position test voltage levels are 15% higher than the test voltage used when the circuit breaker is closed. (Voltage in Open position >15% of that of closed position.)

2. Chance of line to ground flash over.
3. To avoid the flash over the circuit breaker is mounted on insulator above the ground.
4. So the insulation level of body of circuit breaker is raised.
5. We can measure the requirement of insulation level based on flashover

Wet dielectric test- To check the external insulation level

1. It is used for outdoor switch gear.
2. The external insulation is provided for 2 minutes while the rated service voltage is applied.
3. Test over voltage is maintained over 30s.
4. No flash over should be occurred.
5. The test voltage is applied for a period of 1 minutes between (i) phases with the breaker is closed (ii) phases and earth with circuit breaker open (iii) across the terminals with circuit breaker open.
6. Perfect breaker should free from flash over or puncture. • The test voltage should be a standard (1/50) micro second wave.

2. The impulse tests

To check the performance under overvoltage due to switching operation of circuit breaker.

1. To check the performance of switching operation of circuit breaker by using standard impulse wave form.
2. Ensure the successful operation of circuit breaker.

3.Temperature rise test

1. These tests are make sure that the circuit breaker are designed according to the specification.
2. Checking thermal behavior of the breaker.
3. Test can be done with the help of thermo couple.
4. At 40 degree Celsius standard current rating will be 800A.
5. By connecting a resistance parallel with fixed and moving contact, we can measure - requirement of contact resistance - Heat dissipation
6. B.S.116:1952 specification require 500 operation for circuit breaker without failure.

4. Mechanical Test

1. A Circuit breaker must open and close at the correct speed and perform such operation without mechanical failure.
2. Based on B.S. 116: 1952 requires 500 opening & closing operation without failure & with no adjustment mechanism.
3. Mechanical test gives the details on material.
4. Helps to check the life span of the circuit breaker.

5.Short Circuit Test

Importance of Short Circuit Test • Most important test.

1. Check the primary performance of the device.

2. Checking their ability to safely interrupt the fault currents.
3. Short Circuit test consists of determining making and breaking capacities of circuit breaker at various load current and rated voltage.
4. Making capacity of a circuit breaker is the maximum current which the breaker can conduct at the instant of closing.
5. Breaking capacity of the circuit breaker refers to the maximum current in rms value the circuit breaker can interrupt.
6. In the case of isolators, SC test determine their capacity to carry rated short circuit current for a given duration.

Method of conducting short circuit tests

1.Direct test

2.Synthetic Tests

1.Direct test

1. Direct test can be conducted in two ways i) By using a short circuit generator as the source.
2. Short circuit generators is driven by an Induction motor & voltage can be varied by using field excitation. • ii)By using power utility system or network as the source. Overall system includes master breaker and test breaker.

2.Synthetic test

a) Direct testing in the network or field

b) Direct testing in short circuit test laboratories

c) Synthetic testing of circuit breaker

d) Composite testing

e) Unit testing

f) Testing procedure

g) Asymmetrical tests

a) Direct testing in the network or field

• Circuit breaker are some times tested for their ability to make or break the circuit under normal load conditions or under short circuit conditions in the network itself.

• We can do the actual test / real time test in the network.

• We can test the special occasions like very short line fault, breaking of charging current of long line etc.

• It is possible to study the thermal & dynamic effects of short circuit current

Drawbacks of direct testing in network or field

• The circuit breaker can be tested at only a given rated voltage and network capacity.

b)Direct testing in short circuit test laboratories

• In order to test the circuit breakers at different voltage and at different short circuit current short circuit laboratories are provided.

• Short circuit laboratories consists i)short-circuit generator associated with a master circuit breaker ii)resistors iii)reactors and iv)measuring devices.

• A make switch initiate short circuit.

• Master circuit breaker isolate the test device from source.

• If the test device failed to operate, tripping occurred for master breaker.

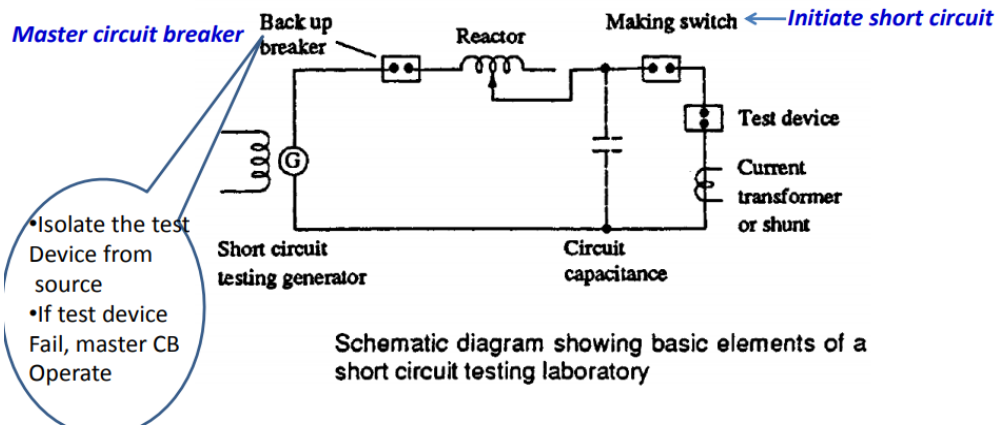

Schematic diagram showing basic elements of a short circuit testing laboratory

c)Synthetic testing of circuit breaker

• Two sources are used

• One supply provide ac current and other supply provide high voltage.

• Current and recovery voltage waveforms across the test circuit breaker can be determined using this test

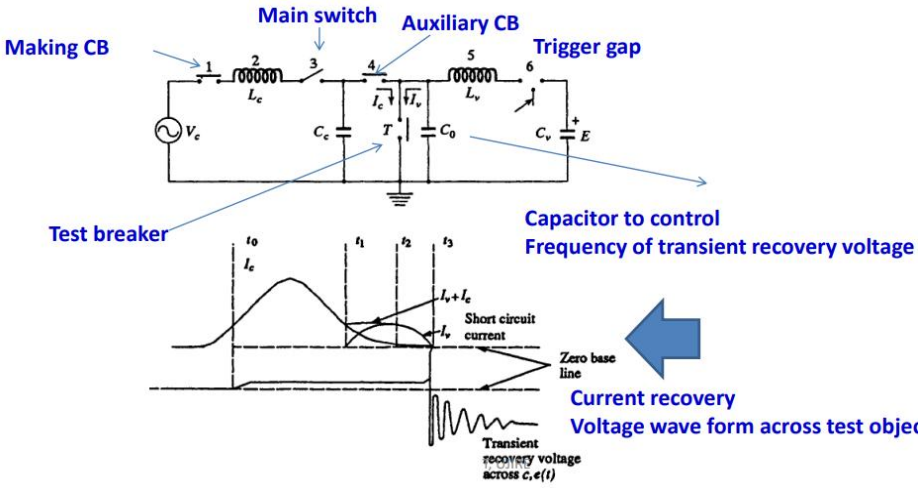

d)Composite testing

1. The breaker is tested under rated voltage level.
2. The breaker is tested under reduced voltage level for checking breaking capacity.

• **Drawback:**

This method doesn't give the proper information about circuit breaker performance.

e)Unit testing

• Large circuit breaker testing under high voltage.

• Above 220kV system.

• More than 1 break is provided per pole.

• Checking the conditions of arc.

• Study the features of arc between fixed and moving contacts.

f)Asymmetric tests

• One test cycle is repeated for asymmetrical breaking capacity.

• Checking dc component in between fixed and moving contact.

• Test condition: dc component at the instant of contact separation is not less than 50% of AC component.

5.3Testing of Cables

• Importance of cables & its insulation- Underground cable and power transmission.

• Transmitting voltage signals.

• Necessity of cable insulation testing.

Types of cable insulation testing

1. Mechanical tests like bending test, dripping test, drainage test , fire resistance and corrosion test.
2.Thermal duty test

3.Dielectric power factor test

4.Power frequency with standing capacity

5.Impulse with stand voltage test

NOTE: 4 and 5 are HV Tests

6.Partial discharge test

7.Life expectancy test

Initial step –preparation of cable samples

1. In order to prepare over voltage withstand test sample have to prepare very carefully.
2. Otherwise excessive leakage or flash over occur during testing.
3. The normal length of the cable samples varies from 50cm to 10m.
4. The termination are usually made shielding of the end conductor with stress shield

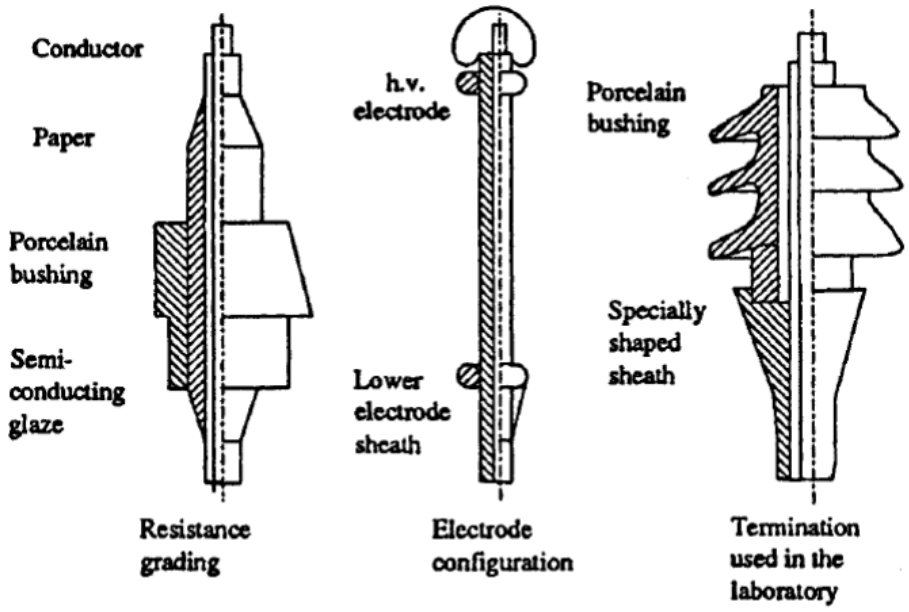

Cable and terminals

1.Dielectric power factor test

1. By using the HV Schering bridge.
2. Dissipation factor tanδ is measured at 0.5,1,1.66 & 2 times of the rated voltage of the cable.
3. Schering bridge has to be given protection against overvoltage , in case breakdown occur in the cable.
4. balance equation is independent of frequency

5.

2.HV Test on cable

a)Power frequency withstand voltage test
b) Impulse voltage with stand voltage test

Cables are tested for with stand the voltage using the power frequency AC, DC & Impulse voltage.

1. At a time of manufacture entire cable is tested under HV for checking continuity of the cable. procedure
2. (i) First cable is tested under AC voltage of 2.5 of rated voltage for 10 minutes & no damage should occur.
3. (ii) After cable is tested under high voltage dc voltage. DC voltage test consist of applying 1.8 times of rated voltage for 30 minutes.
4. (iii) Impulse voltage of the prescribed magnitude as per specification is applied & the cable has to withstand five applications without any damage.
5. Ensure no failure occur during insulation

3.Partial Discharge Test

1. Partial discharge depends upon internal discharge, electric stress and voltage stress. •
2. Procedure:(a) Discharge detection , (b) location of discharge & (c) Scanning methods are important steps of partial discharge test for ensuring the life of insulation.

(a) Discharge detection

Equivalent circuit of a cable for discharge

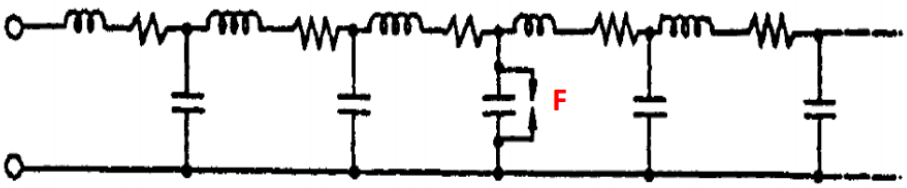

Equivalent circuit of the cable for discharges

1. The cable is connected to the discharge detector through the coupling capacitor.
2. Passage of travelling wave one or two times.
3. Check the cavity by analyze the nature of travelling wave.

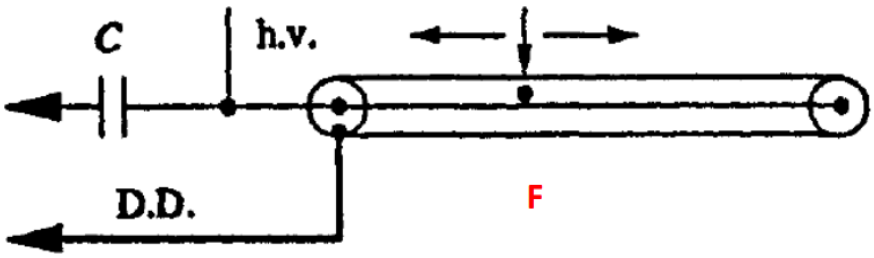

4. In order to improve transient response the given circuit is applicable Considering more number of cable & transient response
5. Serious error can detect • Error depends upon the shape of detector
6. Testing of long cable

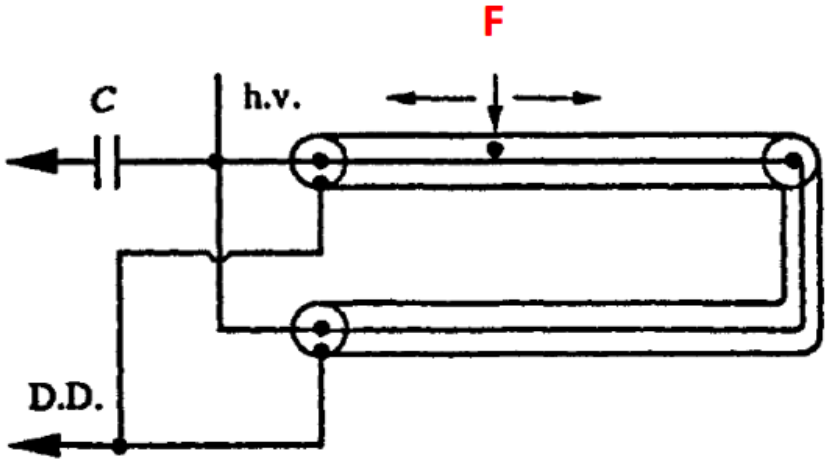

(b) Location Discharge

1. Travelling wave is passing through the cable.
2. If any void present inside the cable ,there will be drop in travelling wave.
3. Measure the duration of wave/ pulse & the distance at which the discharge taking place from the cable can be calculated.
4. The shape of wave/pulse depends upon the nature of discharge.
5. We can observe the attenuation of the travelling wave.

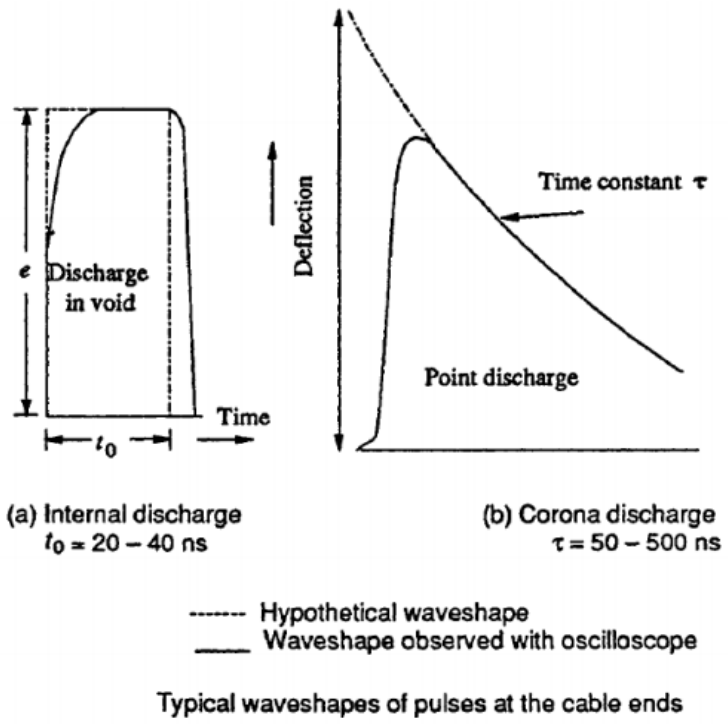

Typical waveshapes of pulses at the cable ends

Location Discharge- detection circuits for long cable

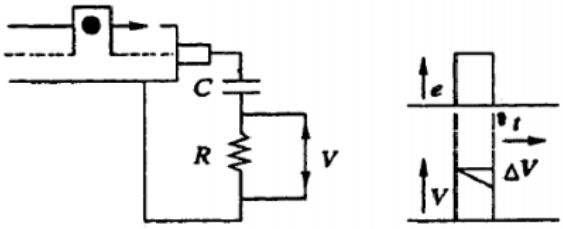

Resistor and capacitor

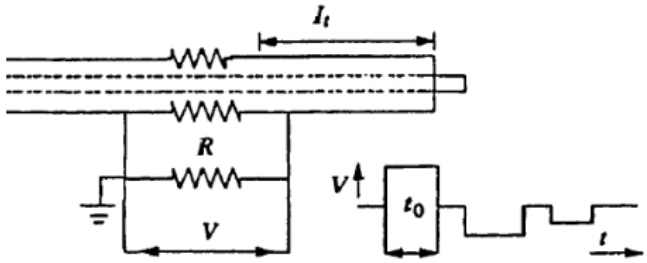

Without capacitor

Verification of location discharge

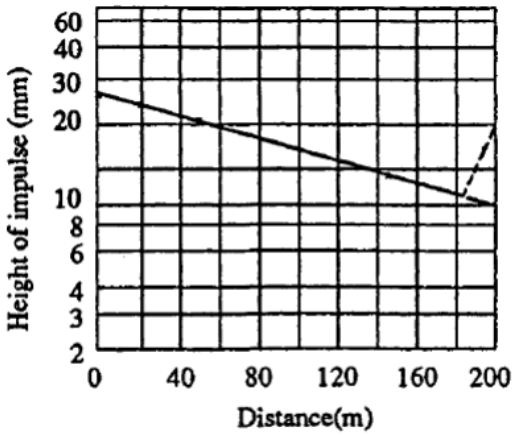

Attenuation of travelling waves

(c) Scanning method

1. To scan the overall cable for checking the voids or imperfections in manufacture. procedure
2. (i) Bare core cable is passed through high electric field & discharge location is done.
3. (ii) The core of the material is passed through a tube of insulating material filled with distilled water.
4. 4 electrodes in the form of rings are arranged
5. They should have electrical contact with water
6. We can check where exactly the occurrence of discharge
7. Discharge can locate at the length of the cable
8. The defective part can be easily isolate by using this method.
9. Can increase the perfection of insulation production.
10. Can isolate the defective insulation at factory site.

(d) Life tests

1. Reliability studies.
2. Able to determine the expected life of insulation.
3. Cables are performed under normal stress and maximum stress.
4. It is established that the relation between the maximum electrical stress Em and the life of the cable insulation in hours 't' approximately follows the relationship
5. The duration of life tests is about 1 hr to 1000 hrs

$$E_m = Kt^{-(1/n)}$$

$K =$ constant which depends on the field conditions and the material, and

$n =$ life index depending on the material.

5.3.1Testing of transformers

Importance of transformer testing

1. Transformer is Important & costly apparatus in power systems.
2. Great care has to be exercised to see that the transformers are not damaged due to transient overvoltage's of either lightning or power frequency.
3. overvoltage tests become very important in the testing of transformers.
4. Mainly concentrating the overvoltage test.
5. Other tests are temperature rise test, short circuit test etc.
6. Performance test- OC-SC test, sumpners test(Back to back test) etc

Types of transformer testing

1.Preliminary testing- To check core insulation level

2.Routine Tests- Measurement of insulation resistance

3.Type test- Temperature rise test 4.Dielectric Test

5.Over Voltage Test- Induced over voltage test & Partial Discharge Test 6.Impulse Testing of Transformers

1. Preliminary testing

• After the core is assembled, 2kV test is done to ensure that the insulation between clamp plates, core bolts and core is adequate.

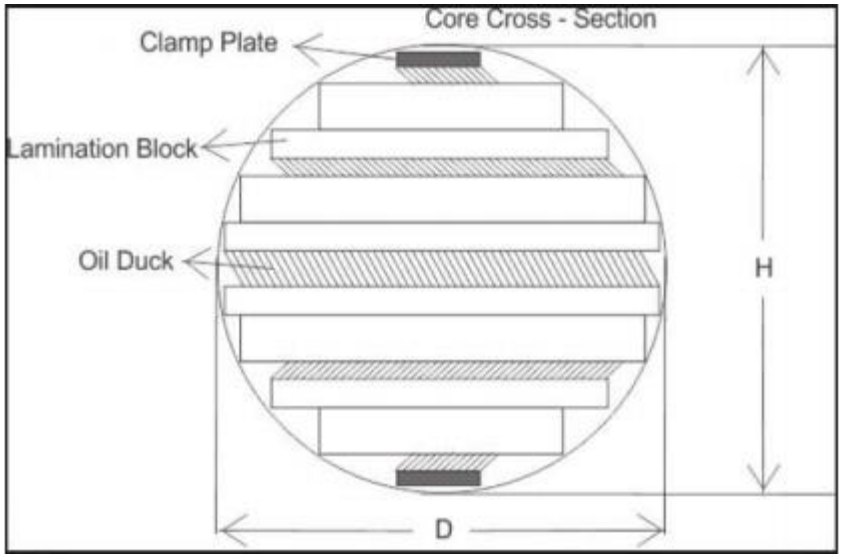

2. Routine Test

1. To measure winding insulation resistance
2. Measurement of Insulation resistance using ‘ Megger’.
3. The ‘Megger’ consists of a D.C power source (hand operated or electrically driven D.C generator or a battery source with electronic circuit) and a measuring system.
4. The insulation test reveals the condition of the insulation inside the transformer.
5. The insulation resistance values are affected by temperature, humidity and presence of dirt on insulators and bushings.

3.Type test- Temperature rise test •

1. Purpose: to confirm that under normal conditions, the temperature rise of the windings and the oil will not exceed the specified limit.
2. Temperature rises are measured above the temperature of the cooling air – Air cooled transformers
3. In water cooled transformers, the temperature rise is measured above the inlet water temperature – Water cooled type transformers
4. Hourly readings of the oil temperatures are taken.
5. Thermometer placed in a pocket in the transformer top cover.
6. Temperature at inlet and outlet of the cooler bank is also taken hourly and mean oil temperature is determined.
7. Ambient temperature is measured.
8. It should be demonstrated that the top oil temperature rise does not vary more than 1 degree Celsius per hour during four consecutive hourly readings.
9. The last reading is taken for the determination of the final oil temperature rise.

4. Dielectric Test

1. Purpose – to verify the power frequency withstand strength of the winding Insulation under test
2. The full AC test voltage shall be applied for 60s to the Windings with graded insulation. •
3. The test shall be successful if no collapse of the test voltage occurs.

5. Overvoltage tests

(i) Induced over voltage test:

1. Purpose : To verify the power frequency withstand strength along the winding under test, between its phases, and to earth and other windings. This test checks the inter turn insulation.
2. Test voltage is twice the corresponding rated voltage.
3. Supply frequency 100 to 400 Hz higher than normal is used.
4. The insulation withstand strength can be checked by using Induced Over Voltage Testing

(ii) Partial Discharge test:

1. Partial discharge tests on the windings are done to calculate the discharge magnitude and the radio interference levels.
2. The winding insulation can be tested using any of the discharge detection methods..
3. The location of the fault or void is sometimes done by using the travelling wave technique similar to that for cables.
4. No method has been standardized as to where the discharge is to be measured.
5. Under the application of power frequency voltage, the discharge magnitudes greater than 10^4 pico coulomb are considered to be severe.
6. The transformer insulation should be such that the discharge magnitude will be far below this value.

6. Impulse testing of transformers

1. Lightning – common cause of flashover on overhead transmission lines.
2. Lightning stroke makes direct contact with a phase conductor and produces a voltage in excess of impulse voltage level.
3. The purpose of the impulse tests is to determine the ability of the insulation of the transformers to withstand the transient voltages due to lightning, etc.

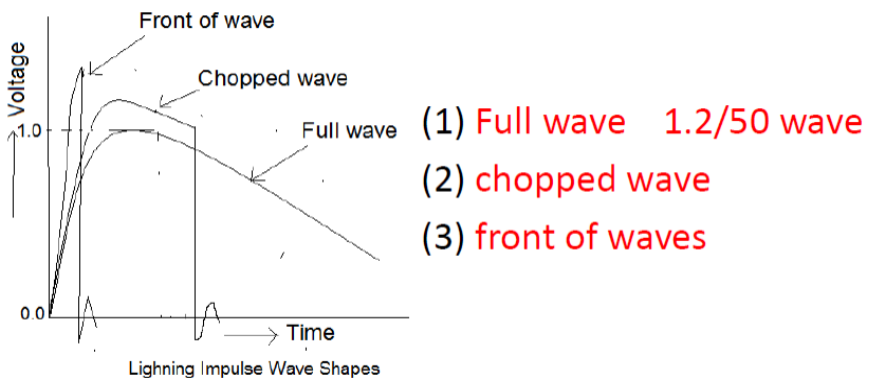

Lighning Impulse Wave Shapes

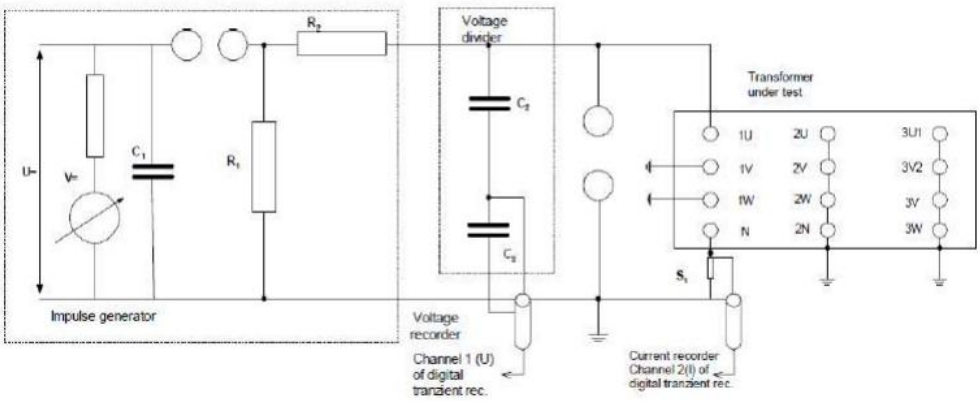

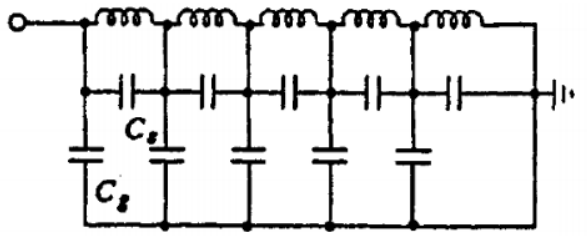

L — Inductance (series)
C_s — Series capacitance
C_g — Shunt capacitance to ground

Equivalent circuit of transformer winding for impulses

Detection and fault location during impulse voltage testing of transformer

1. Can use any of the following methods
   1. General observations
   2. Voltage oscillogram method
   3. Neutral current method
   4. Transferred surge current method

1. General observations

• The fault can be located by general observations like noise in the tank or smoke or bubbles in breather

2. Voltage oscillogram method

• Fault or failure appears as a partial or complete collapse of the applied voltage wave.

• The sensitivity of this method is low

3. Neutral current method

• In the neutral current method, a record of the impulse current flowing through a resistive shunt between the neutral and ground point is used for detecting the fault.

4. Transferred surge current method

• In this method, the voltage across a resistive shunt connected between the low voltage winding and the ground is used for fault location.

Testing of Bushings

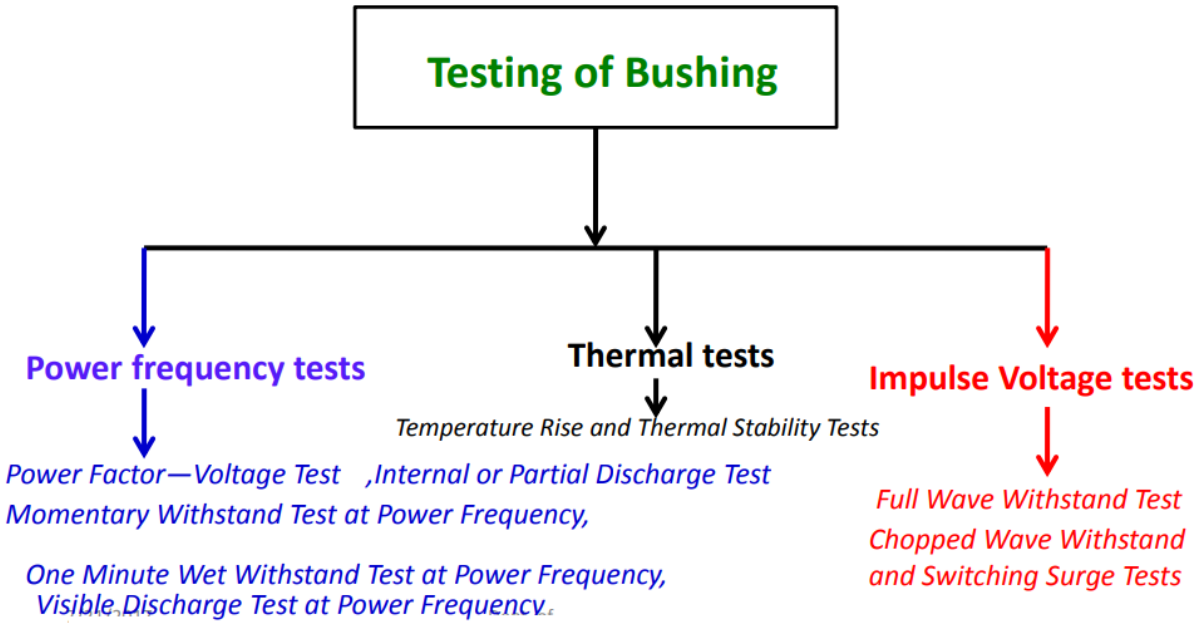

(A) Power frequency test: Power Factor—Voltage Test – using schering bridge Internal or Partial Discharge Test – Any methods for measuring partial discharge Momentary Withstand Test at Power Frequency- Based on IS:2099 specification, Duration – 30s One Minute Wet Withstand Test at Power FrequencyDuration 1 minute, Provide rain /moisture Visible Discharge Test at Power Frequency- Dark room, Based on IS:2099 specification & observe discharge

(B) Impulse Voltage Testing: • Full Wave Withstand Test- Five consecutive full waves of standard waveform are applied, if two of them cause flashover, the bushing is said to have failed in the test. • Chopped Wave Withstand and Switching Surge Tests- HV test, procedure is same as that of Full Wave Withstand Test

(C) Thermal Tests: Temperature Rise and Thermal Stability Tests

• Temperature rise test is carried out in free air with an ambient temperature below 400 degree C at a rated power frequency (50 Hz) AC current.

• The test is carried out for such a long time till the temperature is substantially constant, i.e. the increase in temperature rate is less than l°C /hr.

Course Outcome:

At the end of the course, students will be able to:

CO-5: Solve the dielectric properties and interpret the testing methods of surge arrestors and switchgear.