ATME COLLEGE OF ENGINEERING

13th KM Stone, Bannur Road, Mysore - 570028

DEPARTMENT OF ELECTRICAL & ELECTRONICS ENGINEERING

(ACADEMIC YEAR 2026-27)

LABORATORY MANUAL

COURSE NAME : POWER ELECTRONICS LABORATORY
COURSE CODE: BEEL504
SEMESTER: 5

Vision of the Institute

Development of academically excellent, culturally vibrant, socially responsible and globally competent human resources.

Mission of the Institute

- To keep pace with advancements in knowledge and make the students competitive and capable at the global level.
- To create an environment for the students to acquire the right physical, intellectual, emotional and moral foundations and shine as torch-bearers of tomorrow's society.
- To strive to attain ever-higher benchmarks of educational excellence

Vision of the Department

To create Electrical and Electronics Engineers who excel to be technically competent and fulfill the cultural and social aspirations of the society.

Mission of the Department

- To provide knowledge to students that builds a strong foundation in the basic principles of electrical engineering, problem solving abilities, analytical skills, soft skills and communication skills for their overall development.
- To offer outcome based technical education.
- To encourage faculty in training & development and to offer consultancy through research & industry interaction.

Program Outcomes (PO's)

PO1: Engineering Knowledge: Apply the knowledge of mathematics, science, engineering fundamentals and an engineering specialization to the solution of complex engineering problems.

PO2: Problem Analysis: Identify, formulate, review research literature, and analyze complex engineering problems reaching substantiated conclusions using first principles of mathematics, natural sciences, and engineering sciences.

PO3: Design / Development of Solutions: Design solutions for complex engineering problems and design system components or processes that meet the specified needs with appropriate consideration for the public health and safety, and the cultural, societal, and environmental considerations.

PO4: Conduct Investigations of Complex Problems: Use research- based knowledge and research methods including design of experiments, analysis and interpretation of data, and synthesis of the information to provide valid conclusions.

PO5: Modern Tool Usage: Create, select, and apply appropriate techniques, resources, and modern engineering and IT tools including prediction and modeling to complex engineering activities with an understanding of the limitations.

PO6: The Engineer and Society: Apply reasoning informed by the contextual knowledge to assess societal, health, safety, legal and cultural issues and the consequent responsibilities relevant to the professional engineering practice.

PO7: Environment and Sustainability: Understand the impact of the professional engineering solutions in societal and environmental contexts, and demonstrate the knowledge of, and need for sustainable development.

PO8: Ethics: Apply ethical principles and commit to professional ethics and responsibilities and norms of the engineering practice.

PO9: Individual and Team Work: Function effectively as an individual and as a member or leader in diverse teams, and in multidisciplinary settings.

PO10: Communication: Communicate effectively on complex engineering activities with the engineering community and with society at large, such as, being able to comprehend and write effective reports and design documentation, make effective presentations, and give and receive clear instructions.

PO11: Project Management and Finance: Demonstrate knowledge and understanding of the engineering and management principles and apply these to one's own work, as a member and leader in a team, to manage projects and in multidisciplinary environments.

PO12: Life-Long Learning: Recognize the need for and have the preparation and ability to engage in independent and lifelong learning in the broadest context of technological change.

Program Specific Outcomes (PSO's)

PSO1: Apply the concepts of Electrical & Electronics Engineering to evaluate the performance of power systems and also to control industrial drives using power electronics.

PSO2: Demonstrate the concepts of process control for Industrial Automation, design models for environmental and social concerns and also exhibit continuous self- learning.

Program Educational Objectives (PEO's)

PEO1: To produce competent and ethical Electrical and Electronics Engineers who will exhibit the necessary technical and managerial skills to perform their duties in society.

PEO2: To make students continuously acquire and enhance their technical and socio-economic skills.

PEO3: To aspire students on R&D activities leading to offering solutions and excel in various career paths.

PEO4: To produce quality engineers who have the capability to work in teams and contribute to real time projects.

Power Electronics Laboratory			
Course Code	BEEL505	CIE Marks 50	
Number of Practical Hours/Week	02= (0T + 2P)	SEE Marks 50	
Number of Practical Hours	-	Exam Hours	03
Credits - 01			

Sl. No	Experiments
1	Static Characteristics of SCR.
2	Static Characteristics of MOSFET and IGBT.
3	Characteristic of TRIAC.
4	SCR turn on circuit using synchronized UJT relaxation oscillator.
5	SCR digital triggering circuit for a single phase controlled rectifier and ac voltage regulator.
6	Single phase controlled full wave rectifier with R and R –L and RLE load with or without freewheel Diode
7	AC voltage controller using TRIAC and DIAC combination connected to R and RL loads.
8	Speed control of dc motor using single semi converter.
9	Speed control of stepper motor.
10	Speed control of universal motor using ac voltage regulator.
11	Speed control of a separately excited D.C. Motor using an IGBT or MOSFET chopper.
12	Single Phase MOSFET/IGBT based PWM Inverter

List of Text Books

1. "Power Electronics: Circuit Devices and Applications", Mohammad H Rashid, 4th Edition 2014
2. "Power Electronics: Converters, Applications and Design", Ned Mohan, 3rd Edition 2014.
3. "Power Electronics", Daniel W Hart, 1st Edition 2011
4. "Elements of Power Electronics", Philip T Krein, Oxford, Indian Edition, 2008.

List of URLs, Text Books, Notes, Multimedia Content, etc

- http://www.ece.rutgers.edu/332_460
- Ned Mohan, et al, .Power Electronics, Wiley Eastern Ltd, 1989.
- Shepherd, et al, .Power Electronics and Motor Control., Cambridge University Press, 1998

Internal Assessment Marks:

Two internal tests of maximum 20 marks and taking average of two. Evaluation of record for 30 marks. IA test (20 Marks) + Record (30 Marks) = 50M

Experiment No: 1 **Static Characteristics of SCR.**

Aim:. To study the Static Characteristics of SCR and to find the latching current and holding current.

Apparatus / Components Required:

Sl. No.	Items	Range/Model no	Quantity
1	SCR		
2	Resistors		
3	Voltmeter		
4	Ammeters		
5	Multi-meter		
6	Patch Cords		

Circuit Diagram:

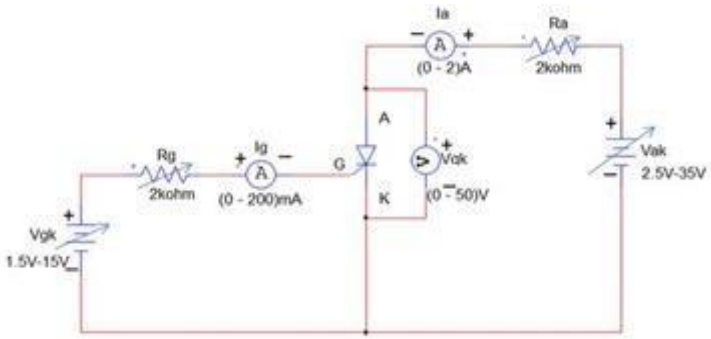

Procedure:

1. Connections are made as shown in the circuit diagram.
2. The gate current I_G is kept at a convenient value say (6 mA)
3. The supply voltage Vgk is gradually increased. The ammeter reading I_A and the corresponding voltage across anode and cathode V_{AK} are noted down.
4. With further increase in Vgk, SCR fires and ammeter will show sudden increase in the anode current I_A. This current and V_{AK} are noted down.
5. Supply voltage Vgk is gradually increased and the corresponding anode current I_A and V_{AK} are noted down. (The gate current is made zero by decreasing Vak & then switched off. The supply voltage Vgk is gradually decreased and the ammeter reading at which the anode current suddenly decreases to zero is noted down. (At this point the current I_A suddenly decreases to zero and voltage V_{AK} suddenly increases) This reading gives the holding current.)
6. Gate current is set to another value and steps 3 to 5 are repeated.
7. Remove the connections of the circuit and switch off the supply.
8. Graph of V_{AK} V/s I_A is drawn for different values of gate current.

Tabular Column:

Sl. No.	I_{G1}=		I_{G1}=	
	V_{AK} in Volts	I_A in Amps	V_{AK} in Volts	I_A in Amps

Typical Graph:

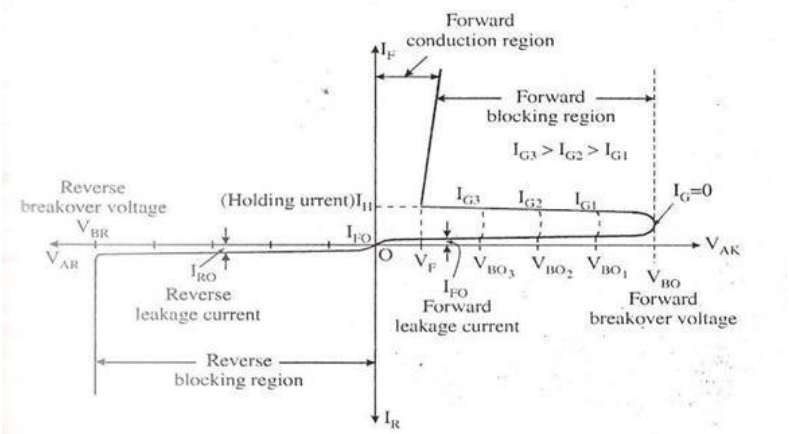

The holding current, I_H =_____mA

The latching current, I_L =_____mA

At gate current, I_{G1} =_____mA, V_{BO1}= V

I_{G2} =_____mA, V_{BO2} = V

Conclusion:

Viva Questions:

1. Sketch the V-I characteristics of an SCR without gate current and with gate current.
2. What is the advantage of SCR over power transistor?
3. What is the constructional difference in an inverter grade thyristor and converter grade thyristor?
4. Explain negative resistance region in the V-I characteristic of an SCR.
5. List the methods of turning ON of SCR.

Experiment No: 2(A) Static Characteristics of MOSFET

Aim: To study the Static Characteristics of MOSFET

Apparatus Required:

Sl. No.	Particulars	Range	Quantity
1	MOSFET		
2	Power Supply		
3	Resistance		
4	Ammeter		
5	Multimeter		
6	Patch Cords		

Circuit Diagram:

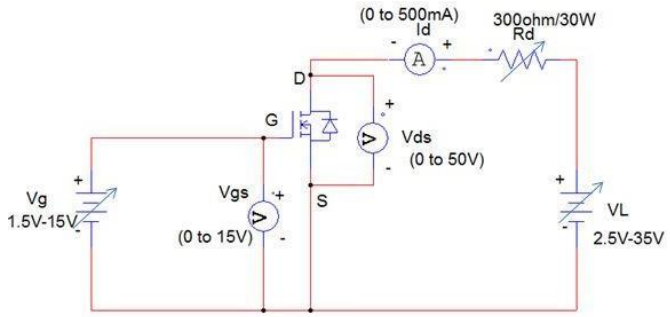

Fig.2.1: Circuit Diagram

Procedure:

A) Transfer Characteristics:

1. Circuit connections are made as shown in the circuit diagram.
2. Initially Vg and V_L are kept at 0V.
3. By varying V_L, V_{DS} is set to 10V.
4. Vg is varied such that V_{GS} is varied in steps.
5. The value of V_{GS} at which I_D starts increasing is noted down. (This value of V_{GS} is threshold voltage).
6. The V_{GS} is further increased in steps and at each step V_{GS} & I_D are noted down.
7. Both Vg and V_L are reduced to zero.
8. V_D is set to some other value say 20V and steps 4 to 7 are repeated.
9. Remove the connections of the circuit and switch off the supply.
10. Graphs of I_D vs. V_{GS} are plotted for different values of V_{DS}.

B) Drain Characteristics:

1. Initially Vg and V_L are kept at zero value.
2. By varying Vg, V_{GS} is set to 3.2V(more than threshold voltage)
3. By gradually varying V_L, I_D and V_{DS} are noted down. (If V_{DS} is lower than Vp (pinch off voltage) the device works in the constant resistance region ie., linear region. If V_{DS} is more than Vp, a constant I_D flows from the device and this operating region is called constant current region.)
4. I_D and V_{DS} are noted down in both linear region and constant current region.
5. V_{GS} is set to some other value say 3.5V and steps 3 to 4 are repeated.
6. Remove the connections of the circuit and switch off the supply.
7. The graph of I_D vs. V_{DS} is drawn for different value of V_{GS}.

Tabular Column:

Transfer Characteristics:

Sl. No.	V_{DS} =		V_{DS} =	
	V_{GS} (V)	I_D (mA)	V_{GS} (V)	I_D (mA)

Drain Characteristics:

Sl. No.	V_{GS} =		V_{GS} =	
	V_{DS} (V)	I_D (mA)	V_{DS} (V)	I_D (mA)

Typical Graphs:

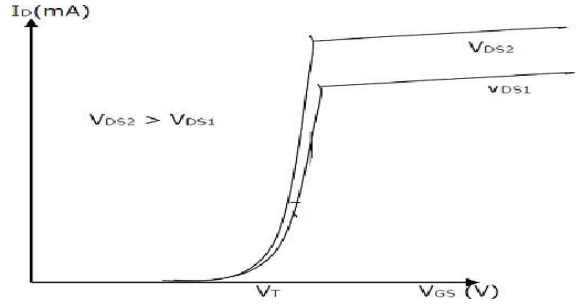

Fig.2.2: Transfer Characteristics

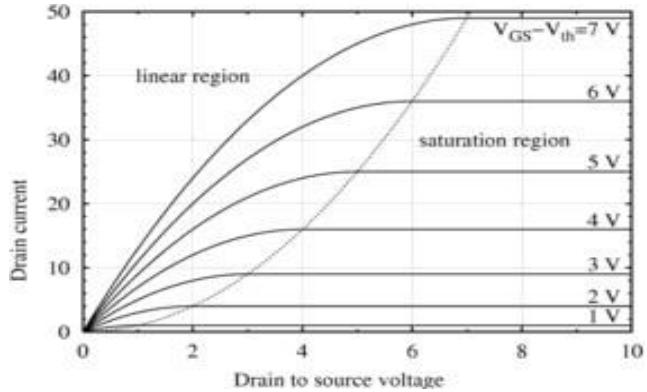

Fig.2.3: Drain Characteristics

Calculations:

Trans-conductance at constant V_{DS}, gm = $\Delta I_D / \Delta V_{GS}$ =

Output resistance at constant V_{GS}, $R_O = \Delta V_{DS} / \Delta I_D$ =

Conclusion:

Viva Questions:

1. What is a MOSFET?
2. What are the types of MOSFET?
3. What are the differences between enhancement type MOSFETS and depletion type MOSFETS?
4. What is pinch-off voltage of MOSFETS?
5. What is a threshold voltage of MOSFETS?

Experiment No: 2(B) **Static Characteristics of IGBT**

Aim: To study the Static Characteristics of IGBT

Apparatus Required:

Sl. No.	Particulars	Range	Quantity
1	IGBT		
2	VRPS		
3	Resistance		
4	Ammeter		
5	Multimeter		
6	Patch Cords		

Circuit Diagram:

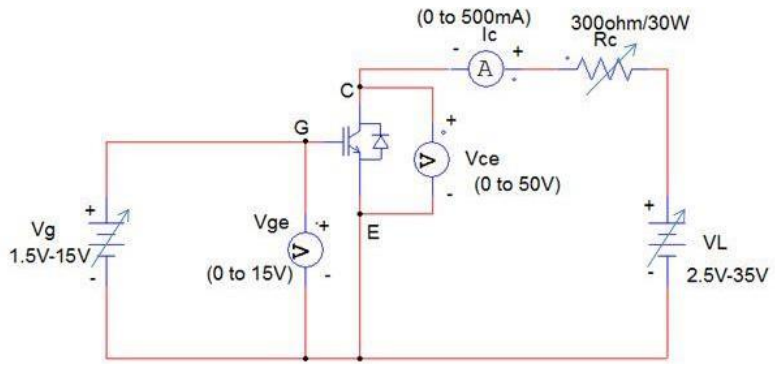

A. Transfer Characteristics:

1. Circuit connections are made as shown in circuit diagram.
2. Initially Vg and V_L are kept at zero position.
3. V_{CE} is set to 10V (say), Vg is gradually varied in steps and V_{GE} at which

Ic starts increasing is noted down which gives the Threshold voltage.

4. Vg is further increased and corresponding V_{GE} and Ic are noted down. **Note:** If V_{GE} is less than V_{GE} (th) only very small leakage current flows from collector to emitter. If V_{GE} is greater than V_{GE} (th) Ic increases significantly].
5. Steps 2 to 4 are repeated for different value of V_{CE}.
6. Remove the connections of the circuit and switch off the supply.
7. The graph of I_C vs. V_{GE} is drawn for different value of V_{CE}.

B. OUTPUT CHARACTERISTICS: -

1. Vg is varied so that V_{GE} is more than threshold voltage.
2. V_L is varied in steps, at each step Ic and V_{CE} are noted, until Ic becomes constant.
3. The step 2 is repeated for different values of V_{GE} (say 5.2V).
4. Remove the connections of the circuit and switch off the supply.
5. Graph of Ic vs. V_{CE} are plotted for different values of V_{GE}.

Tabular Column:

Transfer Characteristics:

Sl. No.	V_{CE} =		V_CE =	
	V_{GE} (V)	I_C (mA)	V_{GE} (V)	I_C (mA)

Output Characteristics:

Sl. No.	V_{GE} =		V_{GE} =	
	V_{CE} (V)	I_C (mA)	V_{CE} (V)	I_C (mA)

Typical Graphs:

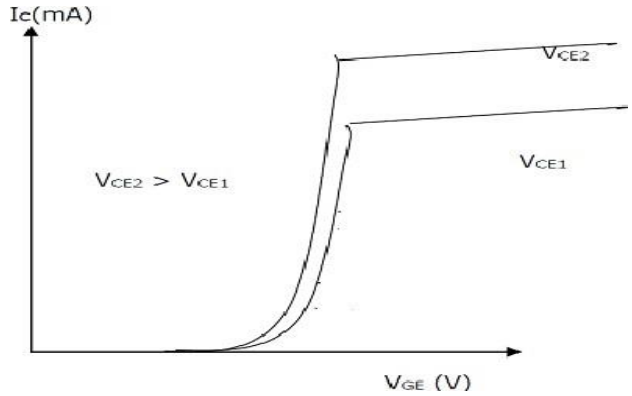

Fig.2.5: Transfer Characteristics

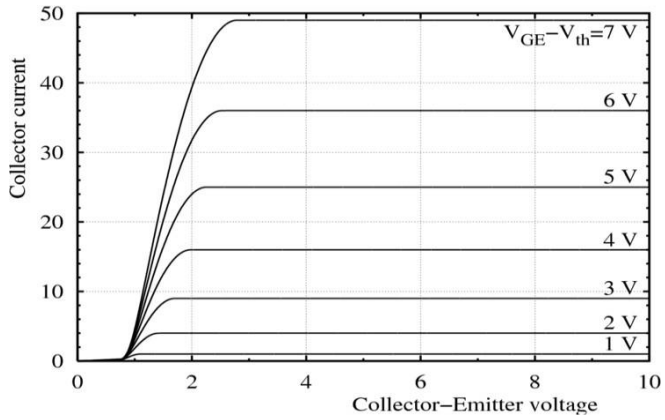

Fig.2.6: Output Characteristics

Calculations:

Trans-conductance at constant V_{DS}, gm = $\Delta I_C / \Delta V_{GE}$ =
Output resistance at constant V_{GS}, $R_O = \Delta V_{CE} / \Delta I_C$ =

Conclusion:

Viva Questions:

1. What is a IGBT?
2. What are the advantages and disadvantages of MOSFETS and IGBT?
3. Mention the differences between the MOSFET and IGBT.

Experiment No: 3 **Static Characteristics of TRIAC**

Aim: To arrive the Static Characteristics of TRIAC.

Apparatus Required:

Sl. No.	Particulars	Range	Quantity
1	TRIAC		
2	Resistor		
3	Voltmeter		
4	Ammeter		
5	Multimeter		
6	Patch Cords		

Circuit Diagram:

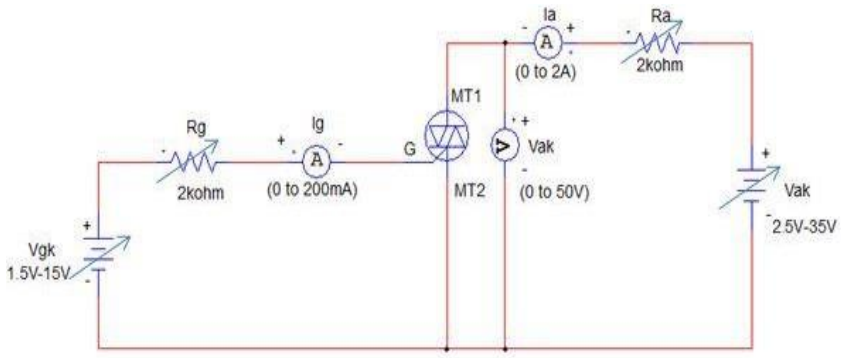

Fig.3.1: Circuit diagram

Procedure:

1. Connections are made as shown in the circuit diagram.
2. MT1 terminal is made positive with respect to MT2.
3. The gate current I_G is kept at a convenient value say (5 mA) using supply voltage Vgk.
4. The supply voltage Vak is gradually increased. The ammeter reading I_{MT1} and the corresponding voltage across MT1 & MT2 is noted down.
5. With further increase Vak, TRAIC fires and the ammeter will show sudden increase in the current $I_{MT1.}$ This current and Voltage across MT1 & MT2 are noted down.
6. Supply voltage V2 is further increased gradually and the corresponding I_{MT1} current and Voltage across MT1 and MT2 are noted down.
7. Gate current is set to some other value and steps 3 to 6 are repeated.
8. Terminals MT1 and MT2 are reversed (OR supply terminal are interchanged) steps 3 to 7 are repeated to obtain reverse characteristics.
9. Remove the circuit connections and switch off the supply.
10. Graph of V vs. I through TRAIC is drawn for different values of gate current.

Tabular Column:

Sl. No.	I_G = mA	
	V_{AK} in Volts	I_A in Amps

Typical Graph:

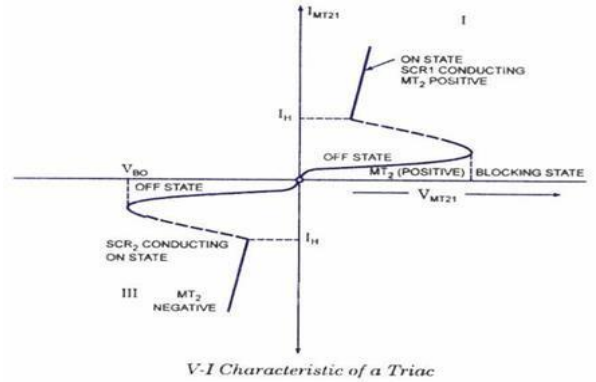

Fig.3.2: Static Characteristics of TRIAC

Calculation:

Forward Resistance: $R_F = \Delta V / \Delta I =$

Conclusion:

Viva Questions:

1. Mention the differences between SCR and TRIAC.
2. Give the advantages of TRIAC and SCR.
3. Mention the applications of TRIAC.

Experiment No: 4 SCR turn-on circuit using Synchronized UJT Relaxation Oscillator

Aim: To study the SCR turn-on using Synchronized UJT Relaxation Oscillator

Apparatus Required:

Sl. No.	Particulars	Range	Quantity
1	UJT		
2	Resistor		
3	CRO & PROBE		
4	Multimeter		
5	SCR		
6	Diode		
7	Zener		
8	Pulse Transformer		
9	Patch Cords & Probes		

Circuit Diagram:

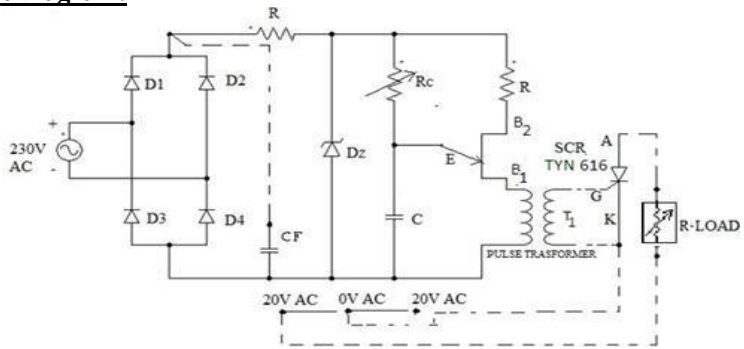

Fig 4.1: Circuit diagram

Connection Diagram:

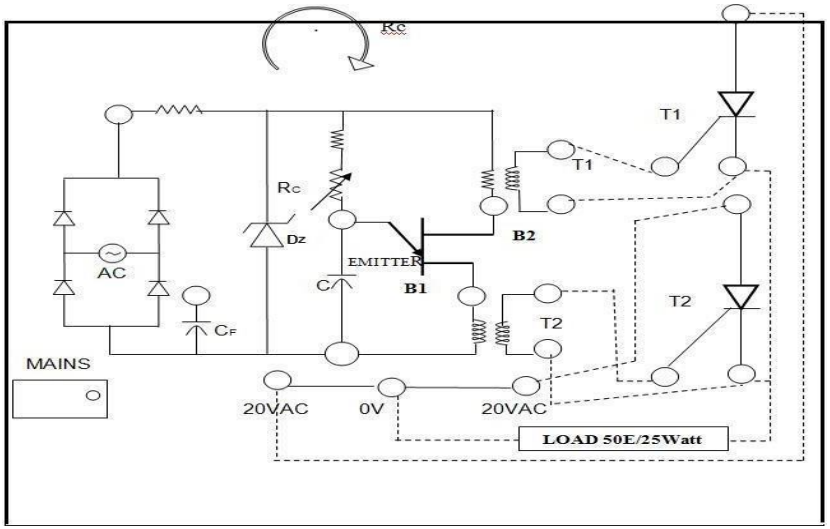

Fig 4.2: Connection diagram

Procedure:

1. Connections are made as shown in the circuit diagram.
2. Supply is switched ON.
3. Output of bridge rectifier, the voltage across Zener diode and capacitor are observed using CRO.
4. Firing angle of the thyristor is varied by varying the Resistance value.
5. Gate signal to the SCR is applied and firing angle is varied from 0° to 180°, V_{DC} and corresponding firing angle (α) are noted down. (**Note:** From output voltage waveform α is found and using multimeter across load V_{DC} is noted)
6. Remove the circuit connections and switch off the supply.
7. Graph of V_{DC} v/s α to be plotted.

Typical Waveforms:

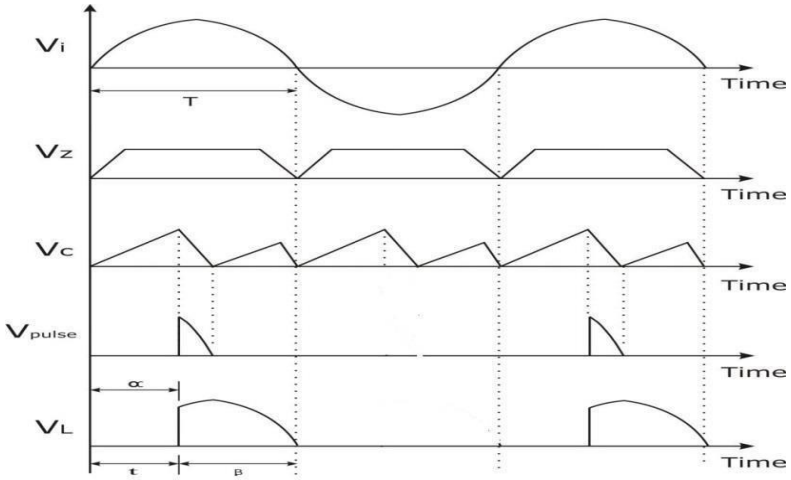

Fig 4.3: Waveforms

Tabular Column:

Sl. No.	Firing Angle (α) in Degrees	V_{DC} Theoretical (Volts)	V_{DC} Practical (Volts)

Typical Graph:

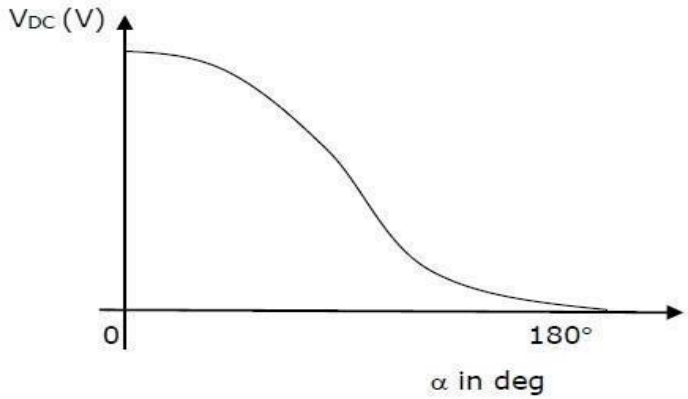

Fig 4.4: Typical Graph

Calculations:

$V_{DC} = V_M (1 + \cos \alpha) / 2\pi$

Where $V_M = V_S * \sqrt{2}$.

Here V_S is the RMS value of the supply voltage (Secondary of step down transformer) & V_M is its peak voltage.

Conclusion:

Viva Questions:

1. Explain the construction of UJT
2. Explain the working of UJT relaxation oscillator circuit
3. Explain the working of line synchronized UJT triggering circuit, and draw the waveforms.
4. Explain the working of asynchronous UJT triggering circuit
5. What are the advantages of UJT triggering circuit?

Experiment No: 5 SCR Digital Triggering Circuit for a Single Phase Controlled Rectifier and AC Voltage regulator.

Aim: To study the SCR Digital Triggering Circuit for a Single Phase Controlled Rectifier and AC Voltage regulator.

Apparatus Required:

Sl. No.	Particulars	Range	Quantity
1	SCR/TRIAC digital triggering unit		
2	Multimeter		
3	CRO		
4	Patch cords and Probes		

Circuit Diagram:

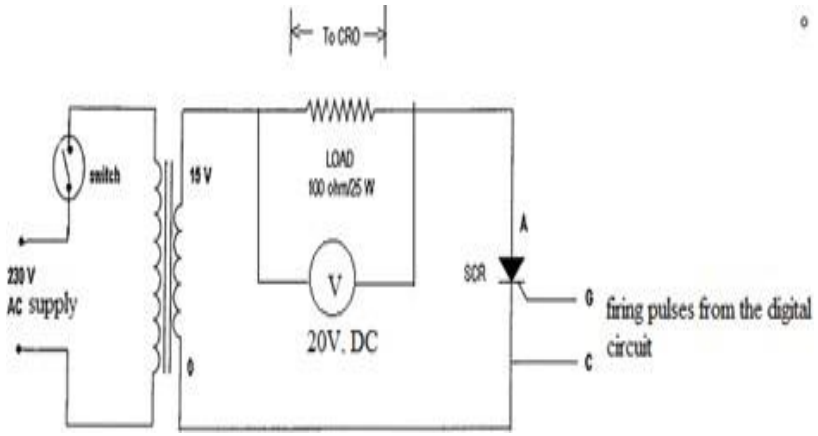

Fig 5.1: Generation of firing signals for controlled rectifier (SCR)

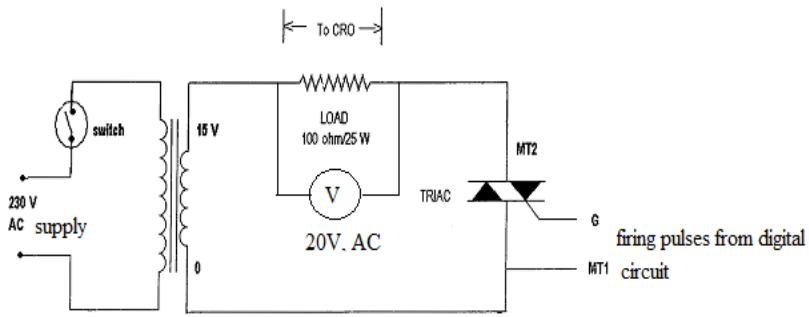

Fig 5.2: Generation of firing signals for AC voltage controller (TRIAC)

Procedure:

Digital triggering for controlled rectifier (SCR):

1. Circuit connections are made for SCR half wave rectifier as shown in the circuit diagram.
2. Connect proper gate pulses to the SCR from the kit.
3. Switch on the module.
4. Vary the firing angle in steps. For each step observe load voltage waveforms on CRO and note down the dc load voltage from the meter
5. Plot the graph of firing angle v/s DC load voltage.

Digital triggering for AC voltage controller (TRIAC):

1. Circuit connections are made for TRIAC AC voltage controller as shown in the circuit diagram. Connect proper gate pulses to the TRAIC from the kit.
2. Switch on the module.
3. Vary the firing angle in steps. For each step observe Load voltage waveforms on CRO and note down the ac load voltage from the meter.
4. Plot the graph of firing angle v/s AC load voltage.

Tabular Column:

Digital triggering for controlled rectifier (SCR):

Sl. No.	Firing Angle (α) in Degrees	V_{DC} Load Voltage (Volts)

Digital triggering for AC voltage controller (TRIAC):

Sl. No.	Firing Angle (α) in Degrees	V_{AC} Load Voltage (Volts)

Typical Graphs:

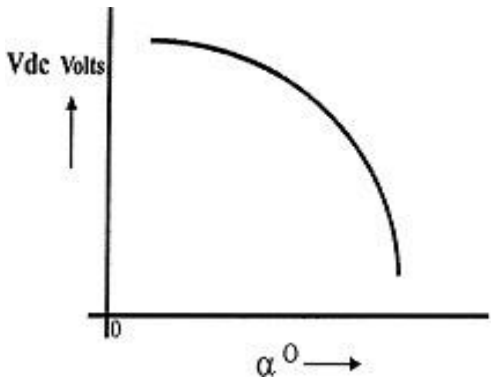

Fig 5.3: Firing angle v/s DC load Voltage for controlled rectifier

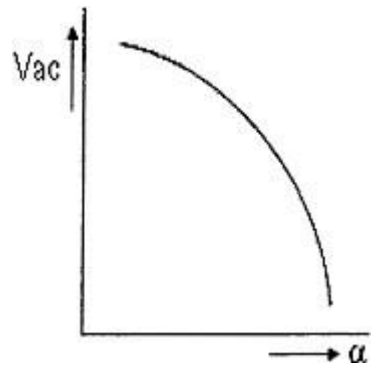

Fig 5.4: Firing angle v/s AC load Voltage for AC voltage controller

Typical Waveforms:

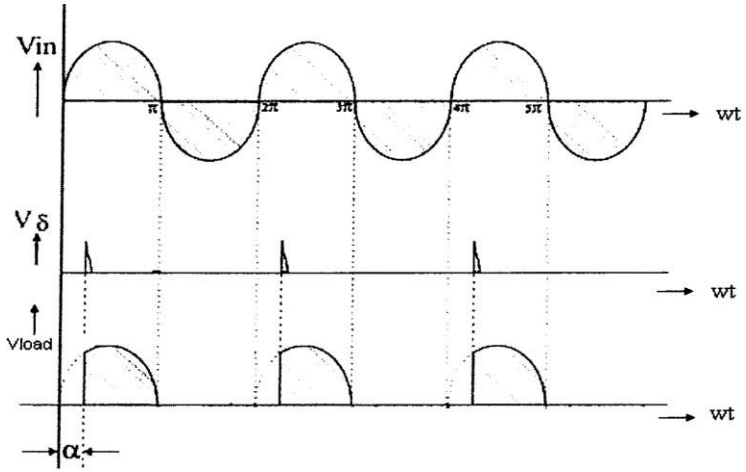

Fig 5.5: Load voltage waveforms of SCR

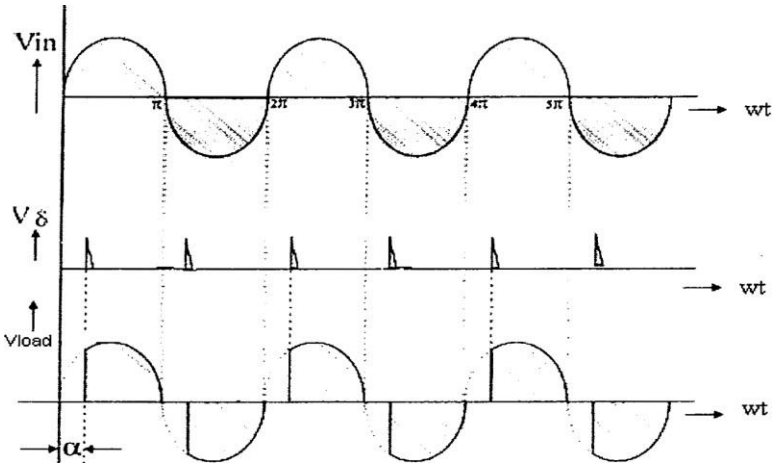

Fig 5.6: Load voltage waveforms of TRIAC

Conclusion:

Viva Questions:

1. Define firing angle.
2. Mention the differences between SCR and TRIAC.
3. Give the applications of SCR and TRIAC.

Experiment No: 6 Single phase controlled full wave rectifier with R and R –L loads.

Aim: To study the Single phase controlled full wave rectifier with R and R –L loads.

Apparatus Required:

Sl. No.	Particulars	Range	Quantity
1	Fully controlled full-wave rectifier module		
2	Firing circuit		
3	Patch cords and Probes		

Circuit Diagram:

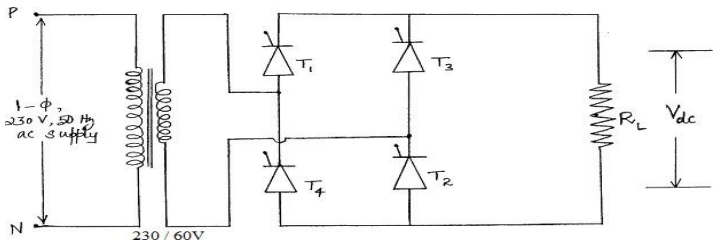

Fig 6.1: Fully controlled bridge rectifier with Resistive load

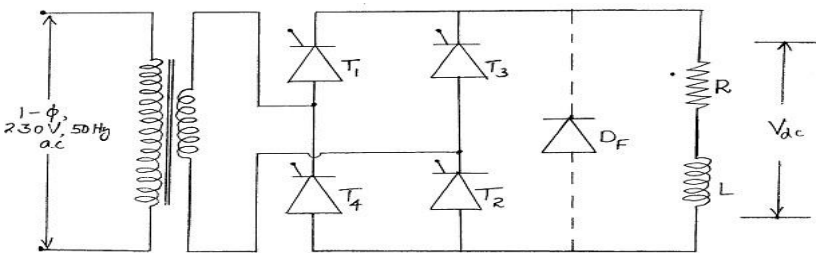

Fig 6.2: Fully controlled bridge rectifier with RL load

Procedure:

1. Switch on the main supply to the firing circuit. Observe all the test points by varying the firing angle potentiometer (Rv).
2. Next make the connections to the power circuit as shown in the circuit diagram.
3. Connect the Resistive load between the load points. Give the firing pulses from the firing circuit to the respective SCRs in the power circuit.
4. Set the firing angle such that it is less than 90 degrees to observe the converter operation and greater than 90 degrees to observe the inverter operation.
5. Switch on the firing circuit and note down the voltage waveforms across the load and the SCRs for different firing angles.
6. Repeat the procedure for Resistive Inductive Load with and without freewheeling diode.

Tabular Column:

Sl. No.	Firing angle (α) in degrees	V_{DC} with R load in volts	V_{DC} with R-L load in volts	V_{DC} with R-L load & freewheeling diode in volts

Typical Graph:

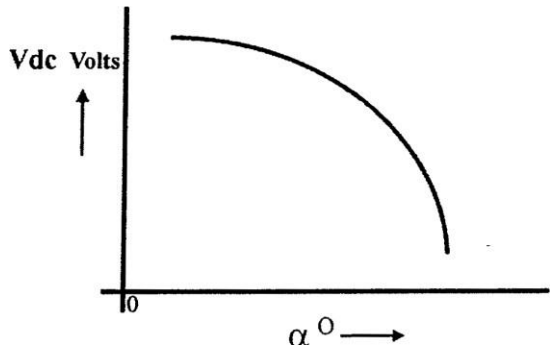

Fig 6.3: Firing angle v/s Load voltage

Typical Waveforms:

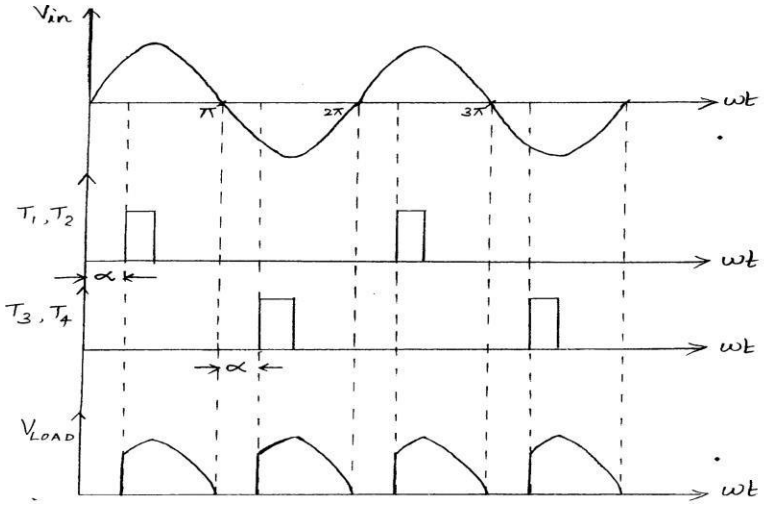

Fig 6.4: Waveforms of Fully controlled bridge rectifier with R load

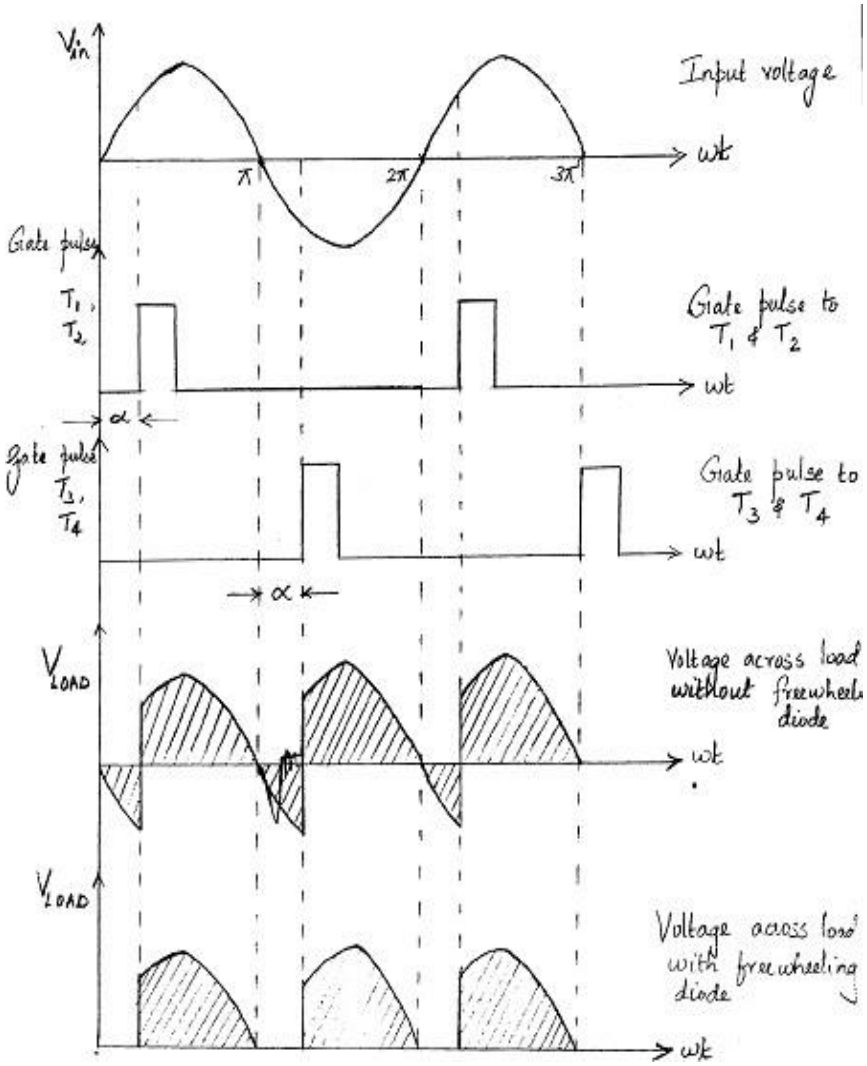

Fig 6.5: Waveforms of Fully controlled bridge rectifier with RL load

Conclusion:

Viva Questions:

1. Define full-wave rectifier.
2. Mention the different types of rectifiers.
3. Give the applications of rectifier.
4. Mention the advantages and disadvantages of rectifier circuits.

Experiment No: 7 AC voltage controller using TRIAC and DIAC combination connected to R and RL loads.

Aim: To study the AC voltage controller using TRIAC and DIAC combination connected to R and RL loads.

Apparatus Required:

Sl. No.	Particulars	Range	Quantity
1	TRAIC		
2	DIAC		
3	Transformer		
4	Voltmeter		
5	Potentiometer		
6	capacitor		
7	Resistor		
8	CRO		
9	Lamp load		
10	Patch Cords and Probes		

Circuit Diagram:

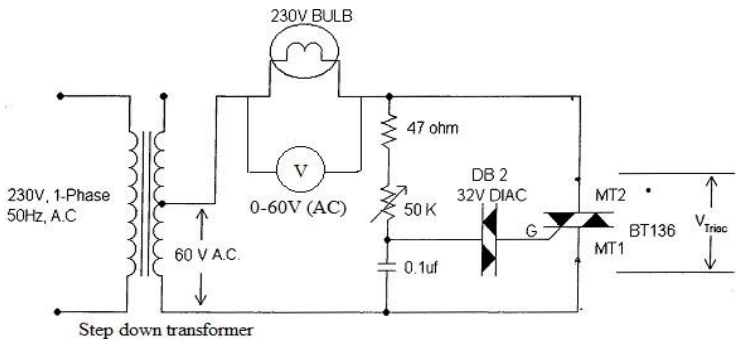

Fig 7.1: Firing circuit for a TRIAC using a DIAC

Procedure:

1. Make the connections as shown in the circuit diagram.
2. Switch on the supply.
3. Set the potentiometer for maximum resistance (maximum firing angle) and observe the load voltage waveform. Since, the firing angle is maximum the voltage across lamp load will be minimum.
4. Vary the potentiometer in uniform steps for different firing angles and observe the load voltage waveforms and note down the voltmeter readings for each firing angle.
5. Tabulate the readings. Plot the waveforms.

Tabular Column:

Sl. No.	Firing Angle (α) in Degrees	V_{AC} Theoretical (Volts)	V_{AC} Practical (Volts)

Typical Graph:

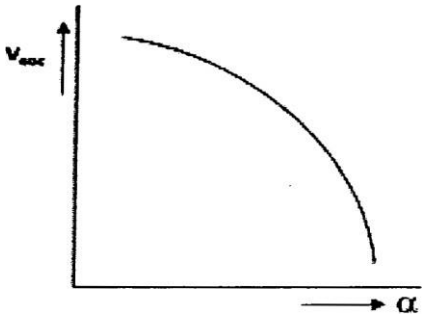

Fig 7.2: Firing angle v/s Output voltage curve

Typical Waveforms:

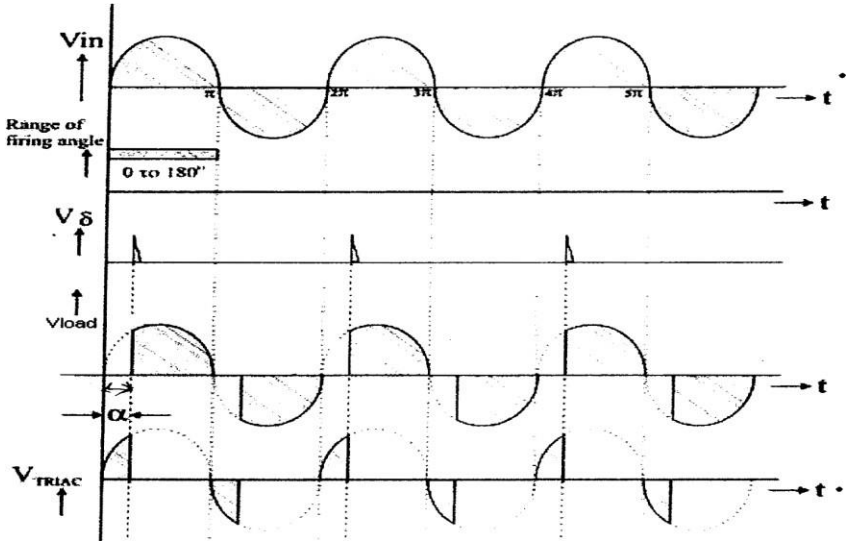

Fig 7.3: Voltage across load and TRIAC

Conclusion:

Viva Questions:

1. Why DIAC is used as a triggering device?
2. What are the applications of DIAC?
3. Explain the operation of TRIAC in different modes
4. What are the advantages and disadvantages of TRIAC?

Experiment No: 8 Speed control of dc motor using single semi converter.

Aim: To control the speed of dc motor using single semi converter.

Apparatus Required:

Sl. No.	Particulars	Range	Quantity
1	DC motor speed control unit		
2	1-φ transformer with tapping's		
3	Firing circuit module		
4	Digital Tachometer		
5	Multimeter		
6	Patch cords		

Circuit Diagram:

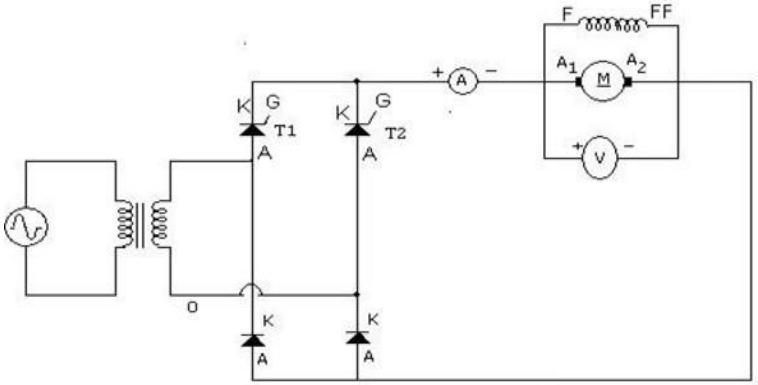

Fig 8.1: Circuit Diagram

Procedure:

1. Connections are made as shown in the circuit diagram.
2. Firing module is switched ON. Output of firing module is checked for triggering pulses by connecting it to CRO. Then the firing module terminals are connected to Gate and Cathode of each SCR, power supply to the module is switched off.
3. Switch ON power to SCR bridge circuit and to the firing modules. Ensure firing angle potentiometer is at 1800
4. Slowly decrease the Firing angle starting from 1800.
5. At each 300 variation of firing angle note down the values of speed and voltage
6. Slowly increase the firing angle to bring it back to 1800 and switch OFF. Supply the both module.
7. Plot the graph of Firing Angle V/S Speed.

Tabular Column:

Sl. No.	Firing angle, α in degrees	Output voltage (V_o) in volts	Speed N in rpm

Typical Graph:

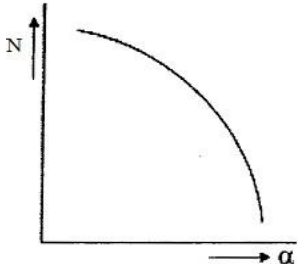

Typical Wav

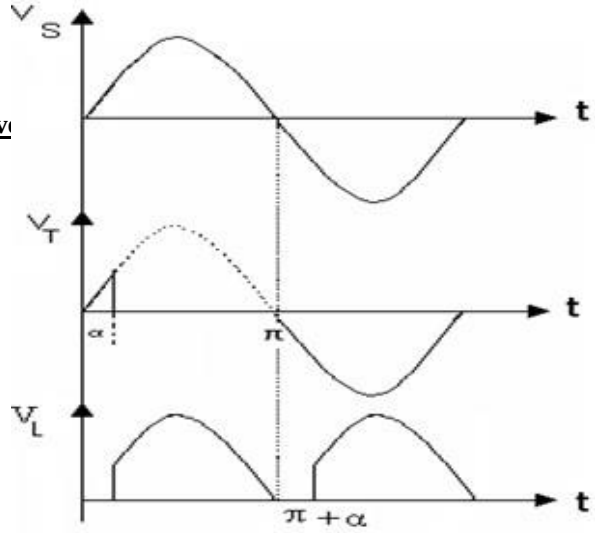

Fig 8.3: Voltage Waveforms

Conclusion:

Viva Questions:

1. What are the three types of Dc drives based on the input supply?
2. What is the purpose of a converter in dc drives?
3. What are the parameters to be varied for speed control of separately excited dc motors?

Experiment No: 9 **Speed control of stepper motor.**

Aim: **To** control the speed of stepper motor.

Apparatus Required:

Sl. No.	Particulars	Range	Quantity
1	Stepper Motor speed control unit		
2	Patch cords		

Circuit Diagram:

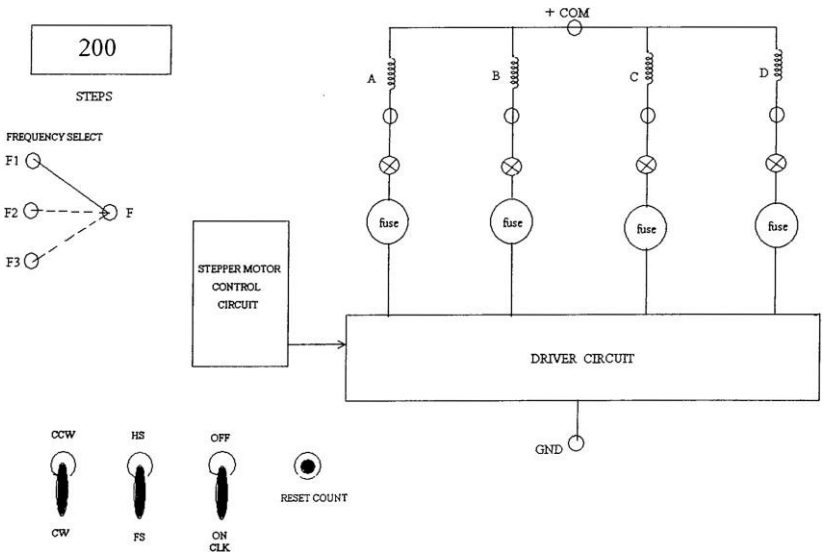

Fig 9.1: Stepper motor speed control unit

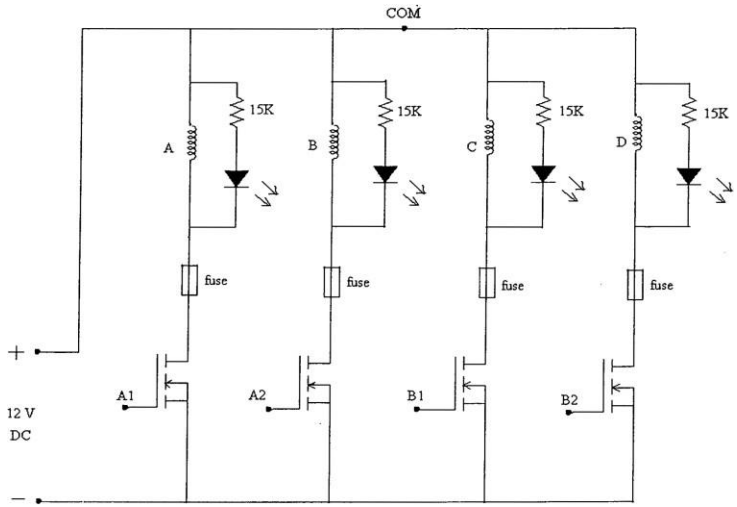

Fig 9.2: Stepper motor driver circuit

Procedure:

1. Connect the stepper motor to the control unit
2. Keeping CLK in OFF position, switch ON the stepper motor control unit.
3. Reset the counter.
4. Note the position of the pointer in the stepper motor.
5. Release the clock pulses one by one and observe that the motor rotation is in progress. Note down the switching logic sequence
6. Switch OFF CLK pulses after some counts.
7. Verify the number of counts in the counter is equal to the number of steps moved by the motor for full step operation and number of counts by the counter is equal to twice the steps moved by the motor for half step operation.
8. Repeat the procedure for both CW and CCW direction of rotation of the motor.

Tabular Column:

Switching Logic Sequence: Full Step Operation

Clockwise Direction						Counter-Clockwise Direction				
Clock	A	B	C	D		Clock	A	B	C	D
1	0	1	1	0		1	1	0	0	1
2	0	1	0	1		2	0	1	0	1
3	1	0	0	1		3	0	1	1	0
4	1	0	1	0		4	1	0	1	0

Half Step Operation:

Clockwise Direction						Counter-Clockwise Direction				
Clock	A	B	C	D		Clock	A	B	C	D
1	0	0	1	0		1	1	0	0	0
2	0	1	1	0		2	1	0	0	1
3	0	1	0	0		3	0	0	0	1
4	0	1	0	1		4	0	1	0	1
5	0	0	0	1		5	0	1	0	0
6	1	0	0	1		6	0	1	1	0
7	1	0	0	0		7	0	0	1	0
8	1	0	1	0		8	1	0	1	0

Note:

1. No of steps rotated by the motor = Final reading- Initial reading.
2. For Full step operation, motor rotates 1.8 degrees or 1 step per pulse.
3. For Half wave operation, motor rotates 0.9 degrees or 0.5 step per pulse.

Conclusion:

Viva Questions:

1. Define the operation of stepper motor.
2. Mention the applications of stepper motor.
3. Give the advantages and disadvantages of stepper motor.

Experiment No: 10 Speed control of universal motor using ac voltage regulator

Aim: To control the speed of universal motor using ac voltage regulator.

Apparatus Required:

Sl. No.	Particulars	Range	Quantity
1	Universal motor speed control unit		
2	1-φ transformer with tapping's		
3	Firing circuit module		
4	Digital Tachometer		
5	Patch cords		

Circuit Diagram:

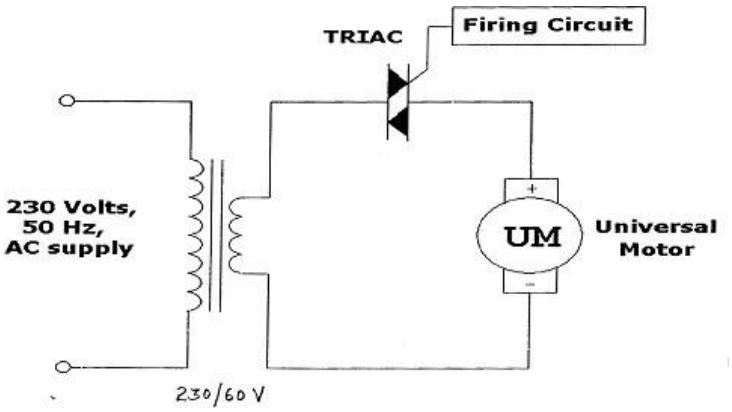

Fig 10.1: AC Voltage Controller

Procedure:

1. Make connections to the firing circuit. Switch on the supply to the firing circuit and observe the trigger pulses. Make sure that all the trigger outputs are proper before connecting to the power circuit.
2. Make the connections to the power circuit as shown in the circuit diagram.
3. Connect the trigger outputs from the firing circuit to the respective SCRs/TRIAC.
4. Keep the firing angle maximum (180°) initially. Choose the SCR/TRIAC selection switch ("SCR for DC voltage control & TRIAC for AC voltage control). Switch on the main supply
5. Vary the firing angle in steps and note down the corresponding output voltage, load current and the speed of the motor.
6. Plot firing angle V/s speed curve.

Tabular Column:

Sl. No.	Firing angle, α in degrees	Output voltage (V_o) in volts	Speed N in rpm

Typical Graph:

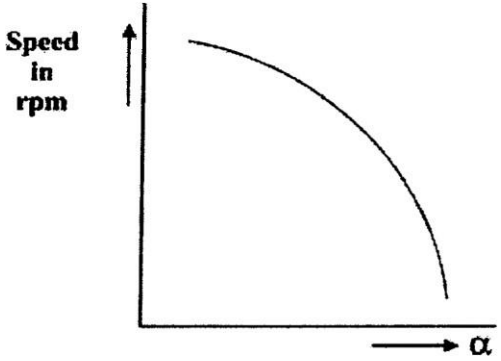

Fig 10.2: Firing angle v/s Speed curve

Conclusion:

Viva Questions:

1. Define universal motor.
2. Describe the working operation of universal motor.
3. Mention the advantages and disadvantages of universal motor.
4. Give the applications of universal motor

Experiment No: 11 **Speed control of a separately excited D.C. Motor using an IGBT or MOSFET chopper**

Aim: To control the speed of a separately excited D.C. Motor using an IGBT or MOSFET chopper

Apparatus Required:

Sl. No.	Particulars	Range	Quantity
1	MOSFET/IGBT Chopper Module		
2	Separately Excited DC Motor		
	Patch cords		

Circuit Diagram:

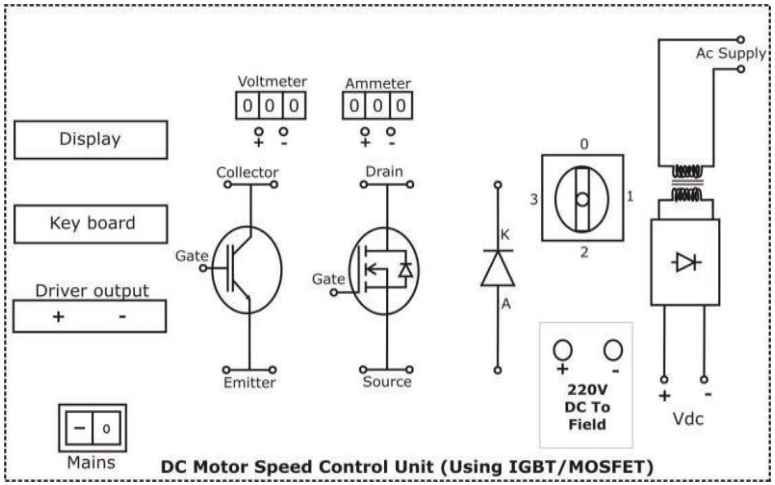

Fig 11.1: Connection Diagram

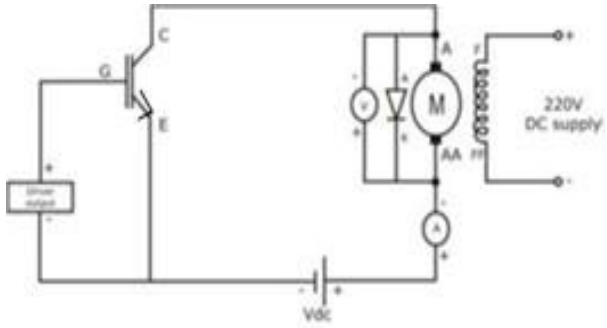

Fig 11.2: Circuit Diagram

Procedure:

1. Check the components/equipment of their correctness
2. Keep the voltage selector switch in OFF position and supply switch is ON.
3. The LCD display shows POWER MOSFET/IGBT CHOPPER 0FF DCY – 0, FRQ – 50, Digital volt meter and ammeter shows 000
4. Measure the Field voltage using digital voltmeter. It should be 220V ± 10% approximately and the neon lamp glows.
5. Now keep the voltage select switch at position 1 and measure the voltage at VDC terminals. It should be 24 volts. The output voltage should be 48 volts when VOLT-SELECT switch at position – 2, 110 volts when the VOLT-SELECT switch at position – 3, 220 volts when the VOLT-SELECT switch position at 4 approximately.
6. Make sure that the DC supply is correct. Now observe the driver output using CRO by varying duty cycle and frequency.
7. Make sure that the driver output is proper before connecting to the gate/emitter or gate/source of IGBT or MOSFET.

8. Now all the outputs are proper. Make the connections as given in the circuit diagram
9. Vary the duty cycle in steps and keep the frequency as constant and observe the speed of the motor and note down the values of V, I and RPM.
10. Now change the frequency in steps and keep the duty cycle as constant and tabulate the necessary values.
11. Draw the graph between duty cycle vs. speed and Frequency vs.speed.

Tabular Column:

V_{IN} = V Frequency = Hz

Sl. No.	Duty Cycle (%)	V_O (V)	I_O (V)	Speed (rpm)

Conclusion:

Viva Questions:

1. Mention the applications of DC motors.
2. Explain the basic principle of DC motor.
3. Mention the types of DC motors.

V_{IN} = V Duty Cycle = %

Sl. No.	Frequency (Hz)	V_O (V)	I_O (V)	Speed (rpm)

Experiment No: 12 Single Phase MOSFET/IGBT based PWM Inverter

Aim: To Design single phase MOSFET/IGBT based PWM inverter.

Apparatus Required:

Sl. No.	Particulars	Range	Quantity
1	DC power supply	(0- 30) V	
2	Full Bridge inverter module		
3	Rheostat	100 Ω / 2A	
4	AC voltmeter	(0 - 10) V	
5	CRO	Dual Trace	
6	Patch cords	(0- 30) V	

Circuit Diagram:

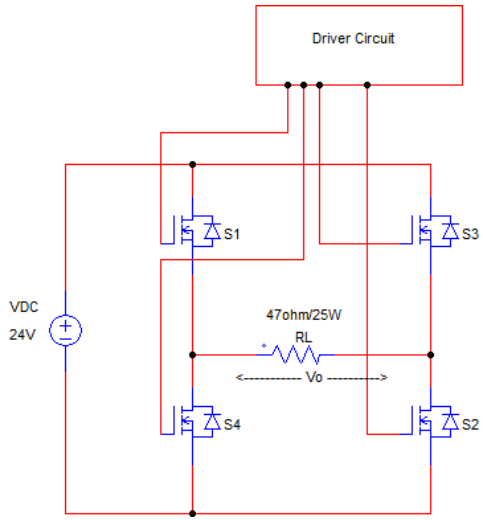

Fig 12.1: MOSFET based single phase PWM inverter

Procedure:

1. Make the circuit connections to the inverter circuit as shown in the circuit diagram.
2. Switch ON the inverter firing unit.
3. Switch ON the DC power supply and set a constant DC input of say 24V.
4. For variable frequency control set the duty cycle at a constant value by adjusting PWM knob. Vary the frequency in steps and for each step observe load voltage waveforms on CRO and note down the AC load voltage from the meter.
5. For fixed frequency control, set the frequency at a constant value. Vary the duty cycle in steps and for each step observe load voltage waveforms on CRO and note down the AC load voltage from the meter.
6. Plot the graph of frequency v/s load voltage and duty cycle v/s load voltage.

Tabular Column:

V_{IN} = V Duty Cycle = %

Sl. No.	Frequency (Hz)	Vo (V)

V_{IN} = V Frequency = Hz

Sl. No.	Duty Cycle (%)	Vo (V)

Typical Waveforms:

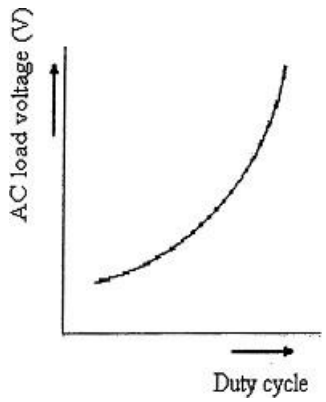

Fig 12.2: Duty Cycle vs. Load Voltage

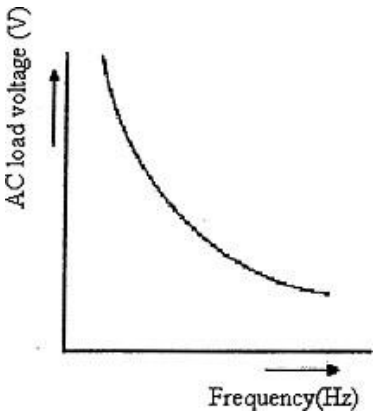

Fig 12.3: Frequency vs. Load Voltage

Conclusion:

Viva Questions:

1. Mention the different types of inverters.
2. Give the advantages of inverters.
3. Mention the performance parameters of inverters.
4. Define THD, Distortion factor and Harmonics.